TU Delft

Delft University of Technology

Inflatable plastic solar still with passive condenser for single family use

Bhardwaj, R.; ten Kortenaar, M. V.; Mudde, R. F.

DOI
10.1016/j.desal.2016.07.011

Publication date
2016

Document Version
Accepted author manuscript

Published in
Desalination

Citation (APA)
Bhardwaj, R., ten Kortenaar, M. V., & Mudde, R. F. (2016). Inflatable plastic solar still with passive condenser for single family use. *Desalination*, *398*, 151-156. https://doi.org/10.1016/j.desal.2016.07.011

Important note
To cite this publication, please use the final published version (if applicable).
Please check the document version above.

Copyright
Other than for strictly personal use, it is not permitted to download, forward or distribute the text or part of it, without the consent of the author(s) and/or copyright holder(s), unless the work is under an open content license such as Creative Commons.

Takedown policy
Please contact us and provide details if you believe this document breaches copyrights.
We will remove access to the work immediately and investigate your claim.

This work is downloaded from Delft University of Technology.
For technical reasons the number of authors shown on this cover page is limited to a maximum of 10.

© 2016 Manuscript version made available under CC-BY-NC-ND 4.0 license https://creativecommons.org/licenses/by-nc-nd/4.0/
Link to formal publication Desalination (Elsevier): http://dx.doi.org/10.1016/j.desal.2016.07.011

Inflatable plastic solar still with passive condenser for single family use

R. Bhardwaj[a,b,*], M. V. ten Kortenaar[b], R.F. Mudde[a]

[a] *Delft University of Technology, Department of Chemical Engineering, Transport Phenomenon Group, Julianalaan 136, 2628 BL Delft, The Netherlands*
[b] *Dr. Ten B.V., Rondweg 11M/N, 8091 XA, Wezep, The Netherlands*

Abstract

Plastics have been the preferred choice of material for the commercial production of the solar stills. However, most of the currently available solar stills are either too big or too small for satisfying drinking water needs of a single family. Furthermore, methods for increasing the production of water from a solar still are often difficult and costly to integrate in a solar still. Here, we show the effect of adding a plastic channels as passive condenser on an inflatable solar still. The still has a basin area of 1.8 m^2. The tests were performed in lab conditions at different water temperatures. The production of water achieved from the still at a water temperature of 73 ^{0}C was 0.75 liter/hour. Furthermore, the production of water increased to more than 0.95 liter/hour with use of air flow over the the passive condenser to mimic wind or with use of wet tissue on the passive condenser to mimic evaporation cooling.

Keywords: Inflatable,solar still, cooling, family

*Corresponding author. Tel: +31(0) 15 278 2418
Email addresses: R.Bhardwaj@tudelft.nl (R. Bhardwaj), marnix@drten.nl (M. V. ten Kortenaar), R.F.Mudde@tudelft.nl (R.F. Mudde)

1. Introduction

Inadequate quality and quantity of drinking water has adverse effect on health and mortality of the children [1]. In 2010, almost 0.75 million child deaths were caused due to diarrhea [1]. Furthermore, approximately 22.5 million years of life were lost due to ill-health, disability or early death caused by unimproved water and sanitation around the world [1]. The World Health Organization (WHO) in its guidelines for drinking water quality assumes an adult requires approximately two liters of drinking water per day, although it acknowledges that water intake can vary significantly [2]. Several other authors have suggested a range of 2 to 5 liters of drinking water per day to be adequate for survival [3, 4]. Furhter, approximately 663 million people still lack access to improved sources of drinking water [5]. In 2015, 79% of the population without an access to an improved drinking-water source lived in rural areas [5].

The purification of available brackish or contaminated water in rural communities at a large scale is difficult due to the immense cost associated with the construction and maintenance of the infrastructure necessary to collect, store, purify and deliver water [6]. Furthermore, most large scale facilities need electricity to operate which is also a limitation for these locations. On a domestic scale resource intensive technologies for water purification are not feasible. With a growing emphasis on sustainability, an alternative environmental friendly approach to purify water on a micro scale is via the solar still [6]. Furthermore, in developing regions of the world, it is ideal to provide a device which would enable small family units to have an access to their own, self-made, pure drinking water [7]. In 2014, a big NGO called for desalination devices capable of producing at least 2.5 liters/day of drinking water at the technology in action conference in Geneva (internal communications, DrTen B.V.). Such a device can possibly satisfy the demand of drinking water of the infants and small children in a family.

Solar distillation has been found to be the most suitable technology for an application in villages and small islands [8, 9, 10, 11]. It presents the best

technical solution to supply remote villages or settlements with fresh water without depending on high technology and expertise [8]. They further offer several other advantages [11]. Solar still works on cheap and renewable solar energy. Hardly any use of electricity is made and hence no carbon emissions occur. There is often plenty of solar energy available in regions of scarce drinking water resource. Solar stills are easy to build and operate. Finally, the solar stills can be more economical than other desalination technologies for providing water to the households and small communities. Kumar and Tiwari [10] suggested that a solar distillation plant with a capacity less than 200 kg/day was more economical than other types of desalination plants.

Amongst the various types of solar still tested and manufactured till date, plastic based solar stills have been the preferred choice of solar still for commercial production [12, 13, 14, 15, 16]. Plastic based solar still present several advantages. Plastic materials are easy to machine and manufacture for large scale production. They presents the advantage of being light in weight and collapsible or foldable into very small space, making it easy to store and transport. Use of thermoplastic material makes the heat sealing and bonding of parts easier and quicker for mass manufacturing. Further, plastics present an ideal solution for the mass manufacturing by injection or extrusion molding [**2**]. Additionally, plastics are cheap and globally available. Thus, easier to locally mass manufacture and sell. All these properties, make plastics an attractive material for large scale production of solar stills. However, most of the commercially available plastic solar stills like the water cone or the water pyramid are either too small or too large for a family [6, 17].

Lower production of water from the solar stills has been a major limitation in its commercialization [11]. Higher production of water can be achieved by including design features like a pump to create a thin water film that rapidly heats up in the sun [18] or a V-through solar concentrators that heat up water before entering the solar still [19]. However, most of these methods are costly, complex and involve regular monitoring. Easier methods for for increasing the production of water in solar stills has been evaluated by sev-

eral authors [20, 21, 22, 23, 24]. Madhlopa and Johnstone [20] reported that the theoretical productivity of a passive solar still with a separate condenser was 62% higher than that of a conventional still. Fath and Elsherbiny [22] added an external condenser to a single slope simple still. They reported an increase in production of water of up to 50% by addition of a passive condenser inside a solar still. The condenser acts as a heat and mass sink which continuously sucks water vapour from the still, condenses it and maintains the still at low pressure and temperature. The uses of condenser limits vapor leaks and losses of energy from the solar still [22]. Application of simple and easily operable methods for increasing the output of water from the plastic solar stills can make them attractive to be used by families in a large number of rural locations.

Without claiming that we present the exact solution to fulfill the needs of everybody in need of drinking water, we demonstrate a family scale inflatable plastic still for solar distillation. The inflatable still has additional condensation channels for improving the passive cooling. All the tests were performed in controlled laboratory conditions. As noted previously by several authors [25, 26, 27, 28, 29], indoor tests eliminate the climatic factors on the efficiency of the solar still and help to standardize its performance at steady state conditions. The prototype was completely made out of plastic and produced more than 0.75 liter/hour of purified water. Additionally, the effect of placing an external fan, internal fan and evaporation cooling on the production of water from the inflatable plastic still is tested and presented. In the presence of a fan, the inflatable plastic still produced more than 6.2 liters of water in 6.5 hours at an average water temperature of 70 ^{0}C. The tests presented in this study were performed in the lab to test the feasibility of such a setup in controlled conditions. In future, experiments in the sunny conditions can be helpful to establish the feasibility of such a setup in the field.

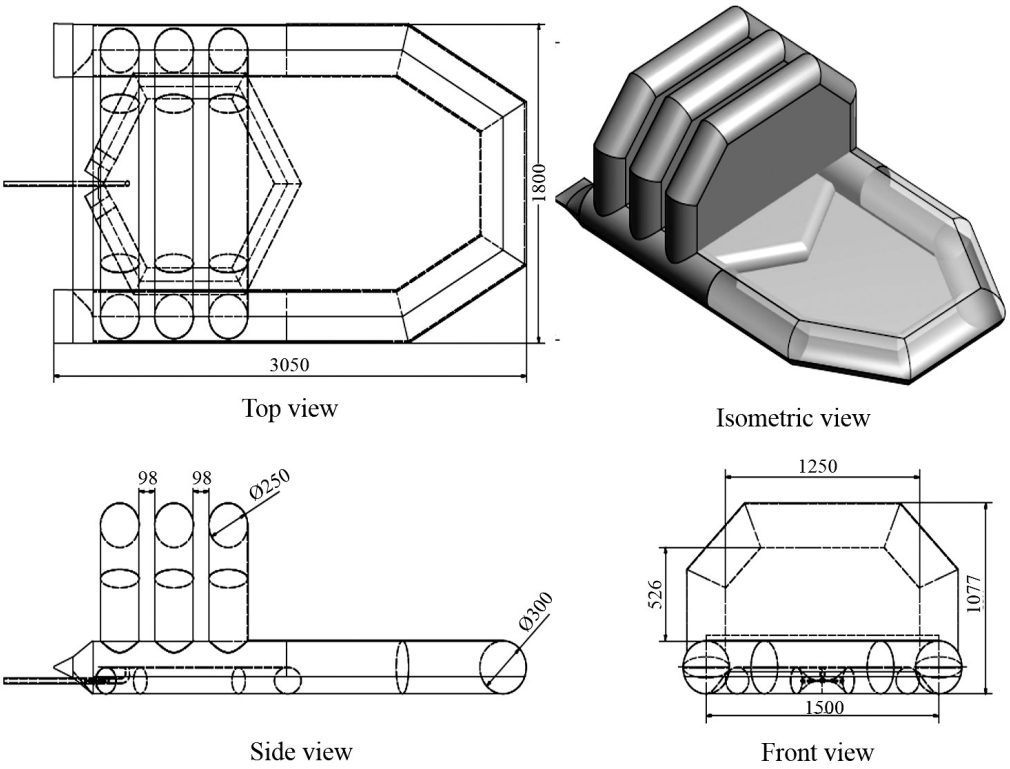

Figure 1: Top view, isometric view, side view and front view of the inflatable plastic solar still. The still include a U-channel of diameter 300 mm at the base and three inverted U-channels connected to the base. The dimensions in the drawing are represented in mm.

2. Materials and methods

Figure 1 shows the CAD drawing of the inflatable plastic still. The still consists of two sections. The front section or basin has a transparent top and a black bottom. The basin holds the contaminated water. The back portion consist of three hollow channels connected on the base of the still. Each inverted channel has two condensing sheets glued on both sides of the post. A water collection tray is kept below the hollow channels. The air duct is located at the right corner of the channel at the base. These three channels constitute the inflatable parts of the still. At the back of the still,

the water collection tray is at a higher elevation in comparison to the basin in the front. A tube is attached to the bottom of the collection tray. The water from the still is taken from the back section via the tube.

The dimensions of the still are depicted in Figure 1. In its completely air-filled condition, the total area of the base of the still is approximately 5.5 m^2. The total area includes the wet area and the inflated area of the channel. The wet area at the base of the still is divided in two sections of approximately equal area of 2 m^2. The base of the still is surrounded by an inflatable U-channel. The diameter of the U-channel at the base was 0.3 meters. The diameter of the inverted channels at the back is 0.25 m. The condensing sheet has an approximate dimension of 1.25 m by 0.52 m. In total, there are six condensing sheets at the back side of the still. The distance between two channels is 0.1 m. At the base of the back section, there is a water collection tray connected with a water pipe at the back. The isometric view of the still depicts it in the completely blown condition. Poly vinyl chloride (PVC) was used as a material of construction for the inflatable still. The air occupies the space in the sides and the top posts of the still. In its deflated from the still was fitted in a bag with dimensions of approximately 0.7 x 0.5 x 0.3 m m^3.

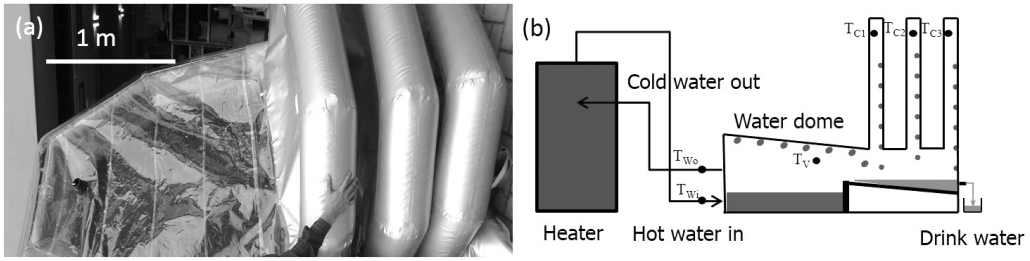

Figure 2: (a) Real time image of the inflatable plastic solar still. (b) Schematic description or the laboratory testing setup. The location of thermocouples is included as bold dots.

2.1. Procedure

Figure 2(b) shows the schematic of the setup used for the experiments. It consists of a water heater and the inflatable solar still. The water heater

was used to provide heat for the experiments instead of solar heat to present standardized results. As noted previously by several authors [25, 26, 27, 28, 29], indoor tests eliminate the climatic factors on the efficiency of the solar still. The hot water from the heater was continuously circulated, to the still and back from the still, using a pump. The water vapor in the still condenses at the top part of the still. The condensed water rolls down from the inclined top and the inverted channels to the water collection tray at the back. The following section lists the procedure for the experiments.

1. The heater was switched on and the water inside is heated to a fixed temperature.
2. The still was then inflated with air and placed on an insulating mat.
3. The connections of the water flow to, and from the inflated still were made.
4. The initial quantity of approximately 20 kg of hot water was used to fill the basin of the inflatable still.
5. The hot water is then circulated to, and from the inflated still at a flow rate of 2.88 kg/min.
6. The temperature of the water flow and the vapor in channels is measured and recorded.
7. After a fixed time, the water is collected from the back section of the still.

3. Results and discussion

3.1. Effect of the water temperature on the production of water

Figure 3(a) shows the effect of the temperature of the incoming water, T_{wi}, on the production of water from the inflatable plastic solar still. The volume of water collected increased by more than two times with an increase in the temperature of the incoming water from 59.5 ^{0}C to 73.7 ^{0}C. The increase in the temperature of water increases the driving force of the condensation and further the production of water from the solar still [30]. Figure 3(b)

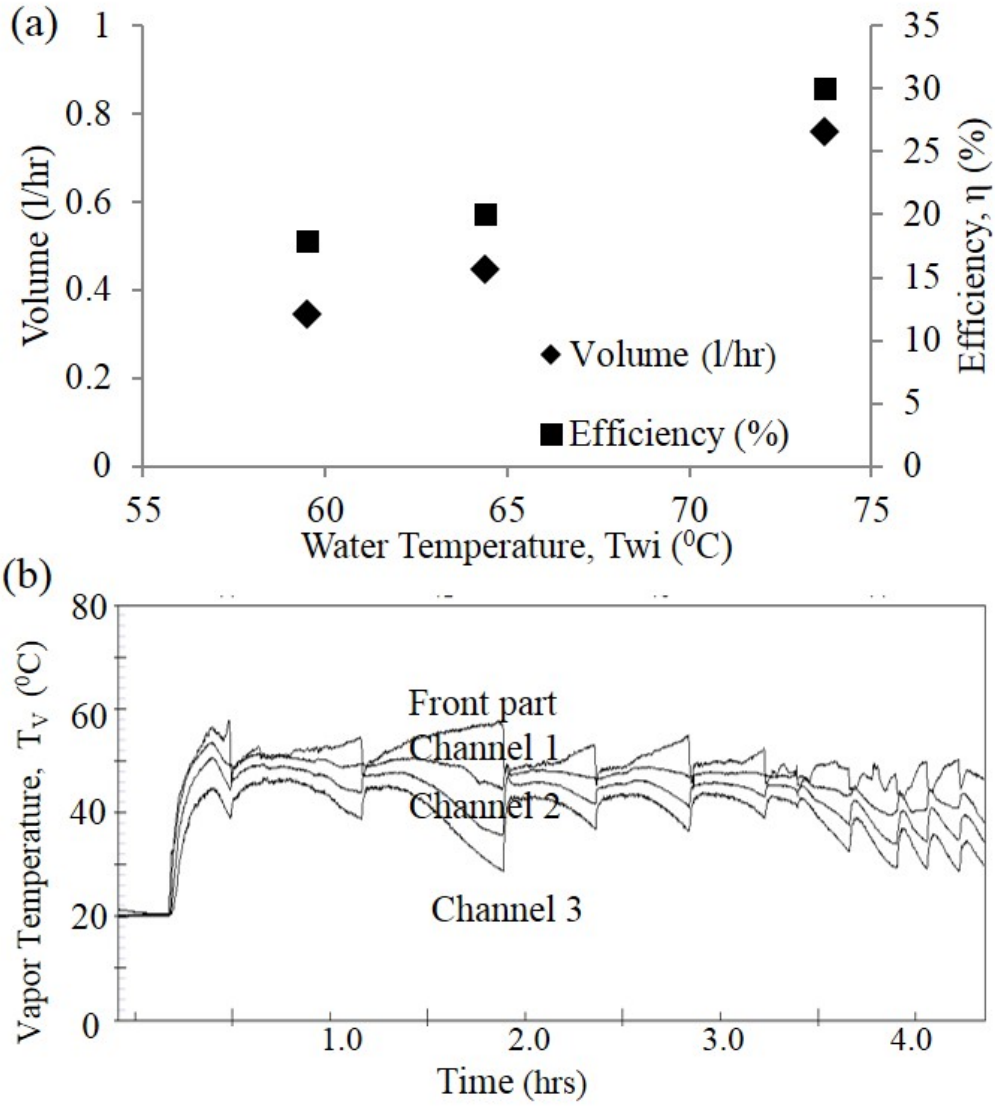

Figure 3: (a)Volume of water collected and corresponding calculated efficiency for different inlet water temperatures of the inflated plastic still.(b) Measured vapor temperature of the front part and channel 1, 2 and 3 of the inflatable plastic still for inlet water temperature of 73.7 ^{0}C.

shows that the variation in the temperature of vapor in the different parts of the inflatable plastic still. The temperature in the front part of the still

is highest, and it decreases gradually when measured in channel 1, channel 2 and channel 3. Furthermore, the measured temperature profiles within the inflatable still shows a fluctuating pattern. These fluctuations in measurements are due to the periodic movement of the inflatable still. The inflatable still leaked air which caused a partial reduction in the gap separating the front part from the back part. In such a position, the temperature of the front part increased and the back part decreased. The still was periodically inflated to regain its original posture. For future long duration tests in the field, a better air tight system is recommended.

The efficiency of the still can be presented as the fraction of incoming heat, which leaves the still via condensation. The efficiency is calculated by dividing the heat flow of condensation $\dot{Q_{cond}}$, by the heat incoming heat flow,$\dot{Q_{in}}$. The value of the efficiency η can be calculated by using the following equations.

$$\dot{Q_{in}} = \dot{M} C_p (T_{wi} - T_{wo}); \tag{1}$$

$$\dot{Q_{cond}} = \dot{m} \Delta H_{evap}; \tag{2}$$

$$\eta = \frac{\dot{Q_{cond}}}{\dot{Q_{in}}} \tag{3}$$

where $\dot{M}$ (kg/s) is the mass flow of water from the heater to the inflatable still, C_p (kJ/kg.K) is the specific heat capacity of water, T_{wi} and T_{wo} are the temperature of water coming in and going out from the inflatable still, $\dot{m}$ (kg/s) is the mass of water collected from the inflatable still and ΔH_{evap} (kJ/kg) is the enthalpy of vaporization of water. The measurements of flow of water $\dot{M}$ (kg/sec) was measured twice, at the beginning and at the end of the experiment. The value of $\dot{M}$ was measured as 2.88 kg/min for most of the experiments presented in the paper. The holdup volume of water in the inflatable still was 2 kg. The value of $\dot{m}$ (kg/s) was calculated on the basis of measurement of total volume of condensed water collected from the inflatable still at the end of the experiment.

Table 1: Calculated values of efficiency based on the measured values of the volume of water condensed from the inflatable still.

No.	Temperature(^{0}C)		time	Volume		Q_{in}	Q_{cond}	η
	T_{wi}	T_{wo}	(hrs)	(l)	(l/hr)	(kW)	(kW)	(%)
1	59.5	53.1	6.5	2.24	0.34	1.28	0.23	17.6
2	64.4	57.0	6.0	2.68	0.45	1.48	0.29	19.7
3	73.7	65.3	4.0	3.04	0.76	1.68	0.50	29.6

Table 1 shows the calculated values of the efficiency based on the experiments performed at different temperatures. The table also shows the measured values of the temperature and the volume of water produced in a fixed duration. The calculations are done using the equation 3. Moreover, the Figure 3(a) shows that the efficiency increases upto 30% with an increase in the temperature of water from 59.5 ^{0}C to 73.7 ^{0}C. The efficiency is expected to increase with an increase in the heat input and an increase in the temperature of water in the thermal still [30].

3.2. Effect of fan cooling and evaporation cooling on the production of water

Figure 4(a), (b) and (c) show schematics for the different modes employed to test the effect of additional cooling on the production of water from the inflatable plastic still. These are (a)fan outside, (b)evaporation cooling and (c)fan inside the inflatable plastic solar still. A table fan with a power of 25 watt was used to provide the external air flow. For the evaporation cooling, a tissue wetted with water was kept on the top of the channels during the test. A fan with a power of approximately 2 watt and a case width of 80 mm was used for providing the air flow inside the inflatable plastic still. Furthermore, Figure 4(a), (b) and (c) show the placement of thermocouples at different locations inside the inflatable still. The measurements of the temperatures are depicted in Figure 4(d), (e) and (f). The difference in the temperature profiles for the three cases are explained in the following section.

Figure 4(d) shows the profile of the temperature of the vapor measured in

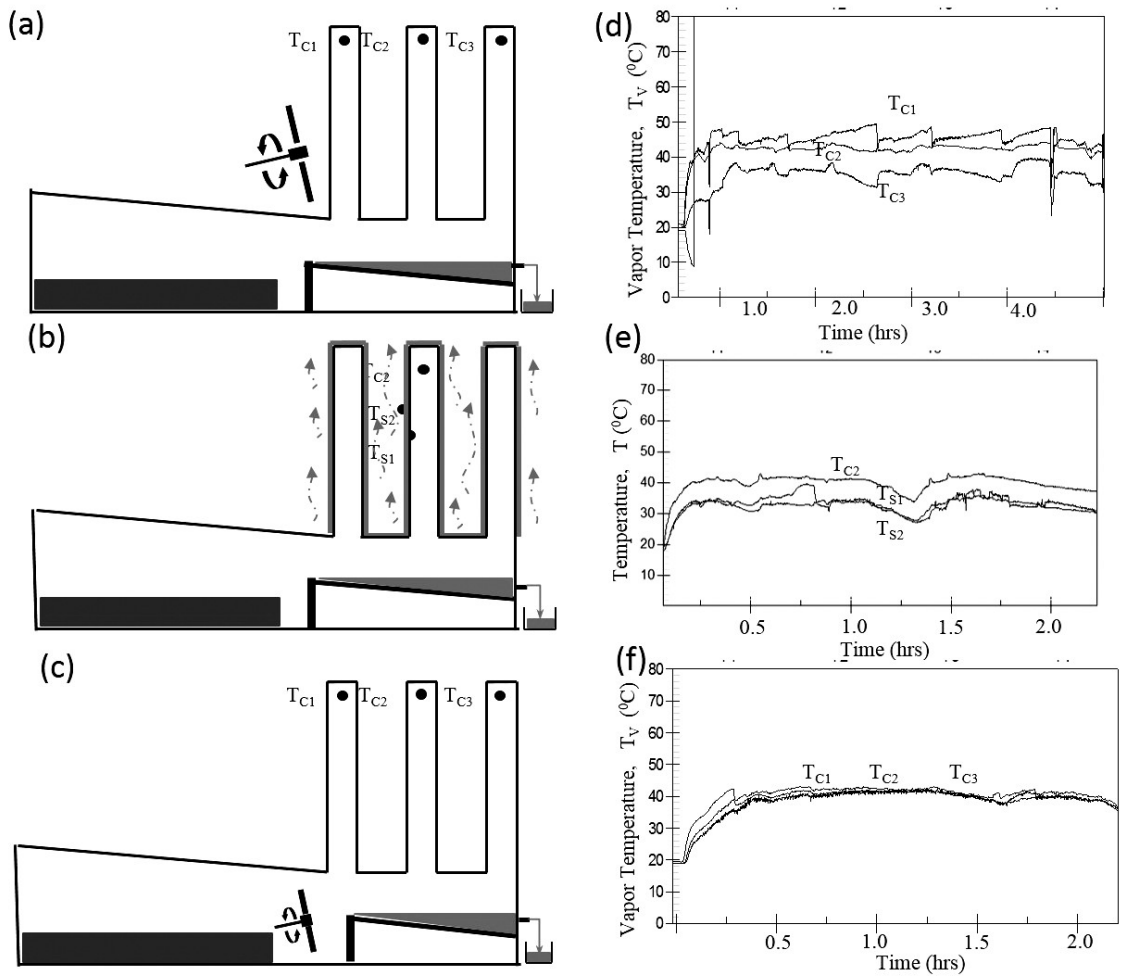

Figure 4: Experimental schematics and temperature profiles for the different modes of operation of the inflatable plastic solar still. (a),(d) Fan outside; (b),(e) Evaporation cooling and (c),(f) Fan inside

the three channels of the still with an external fan for cooling the channels. The temperature measured in the three channels show similar fluctuations to the fluctuations in temperature shown in Figure 3(b). These fluctuations are caused due to the deflating and subsequent inflating of the still as previously explained in section 3.1. Figure 4(e) shows the profiles of the temperature

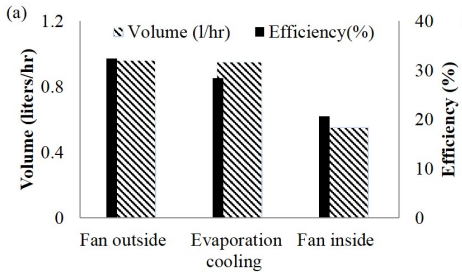

(b)

Mode	Temperature (^{0}C)		time (hr)	Volume		Q_{in} (kW)	Q_{cond} (kW)	η, (%)
	T_{wi}	T_{wo}		l	l/hr			
Fan outside	69.8	60.0	6.5	6.25	0.96	1.95	0.63	32.3
Evaporation cooling	71.3	60.5	2.0	1.90	0.95	2.19	0.62	28.4
Fan inside	70.2	61.5	2.0	1.10	0.55	1.75	0.36	20.7

Figure 5: (a) Measured volume of the condensed water collected from the inflatable plastic still operating in different modes. (b) Table with the measured data and the calculated data for the inflatable plastic still operating in different modes

in middle channel for the experiment of the evaporation cooling. The three temperature profiles include the vapor inside the channel, the inside plastic surface and the outside plastic surface (beneath the tissue paper). The temperature of the surface closely follows the temperature of the vapor inside the channel. Furthermore, the temperature drop at the surface of the channel was negligible. Finally, Figure 4(f) shows the temperature profiles with a fan kept inside the inflatable still. The fan decreases the temperature difference between the individual channels.

Figure 5 shows the effect of fan cooling and evaporation cooling on the production of water from the inflatable plastic still. The production of water increased to more than 0.95 liters/hour with the use of evaporation cooling and external fan cooling. Furthermore, the efficiency of the still increased more than 32% with the use of an external fan. The water temperature for the experiments was around 70 ^{0}C as seen in Figure 5(b). The comparison in Figure 5(b) shows the amount of water collected from the still in 6.5 hours and 2.0 hours. Further, it shows the calculated values of water collected averaged per hour. The use of average values of water collection can be made as the condensation rate remains stable with time as shown previously [31]. A comparison of the average water collection from different modes of operation of the inflatable still show that the use of evaporation cooling

and an external fan have a much stronger effect on the production of water that the use of fan inside the inflatable still. The higher production in the earlier modes suggests that it is more essential to take out heat from the condensation surface than to improve the flow of vapor inside the inflatable still. Additionally, the production of water of about 1 liter/ hour suggests that such a system is capable of providing clean drinking water to a family at a rate of 6-10 liter/day.

3.3. Effect of a one channel passive condenser on the production of the water

(a)

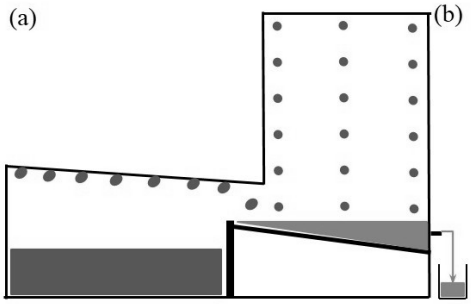

(b)

Mode		One-channel
Temperature (^{0}C)	T_{wi}	79.5
	T_{wo}	68.1
Time (hrs)		2.0
Volume (l)		1.50
Volume (l/hr)		0.75
Heat in (KW)		2.29
Heat out (KW)		0.49
η, (%)		21.8

Figure 6: (a)Schematics of experimental setup for testing the effect of change in geometry of the inflatable plastic solar still; (b)Table with measured data and calculated data for experiment performed with change in geometry for the inflatable plastic still

Figure 6(a) shows the schematic of the water dome with a different design of the passive condenser. Instead of three channels the condensation section was changed to one channel. The overall area of the passive condenser was reduced to 2.2 m^2. The test conditions and results of the experiments are given in figure 6(b). The test was carried out for a duration of two hours. The temperature of incoming water at around 79.5 ^{0} C. The total volume condensed in this geometry was 1.5 liters and the efficiency of the still was calculated to be more than 21%. The efficiency achieved from a single channel inflatable still tested at water temperature T_{wi}, of 79.5 ^{0}C was calculated to be lower than the one achieved for the three channel inflatable still tested at T_{wi} of 73.7 ^{0}C. The difference in efficiency suggests that a three channel

passive condenser is an effective design for the production of water from the inflatable plastic still.

4. Conclusions

A production of 0.76 liters/hour of condensed water was achieved using the inflatable plastic solar still with a passive condenser. The passive condenser was build as an addition to the water basin for providing additional area for the condensation surface. The production of water increased by more than two times with an increase in the temperature of water from 59.5 ^{0}C to 73.7 ^{0}C. Furthermore, the effect of evaporation cooling or an external fan cooling increased the production of water from the still to more than 0.95 liters/hour. The current tests were performed the lab to test the feasibility of such a setup in controlled indoor conditions. The results suggest that the inflatable plastic still have the potential to provide one family with drinking water. Further, the inflatable still also faced practical challenges of leakages of air from its channels. In future, experiments in the sunny conditions with a completely air tight plastic still are envisioned. It is important to consider several challenges in such an endeavor. These challenges include vulnerability of the inflatable plastic still against physical abrasion due to harsh weather conditions (rain, wind and dust), by birds or other animals and presence of sharp objects. Additionally, deposition of dust, plant leaves, bird excreta and aging can lead to deterioration in the quality of plastic. The physical abrasion and deterioration of plastic material can result in lower amount sunlight penetration and overall reduction in water output. The measurements of these effects can be helpful to establish the feasibility of such a setup in the field.

References

[1] L. Liu, H. L. Johnson, S. Cousens, J. Perin, S. Scott, J. E. Lawn, I. Rudan, H. Campbell, R. Cibulskis, M. Li, C. Mathers, R. E. Black,

Global, regional, and national causes of child mortality: An updated systematic analysis for 2010 with time trends since 2000, The Lancet 379 (2012) 2151–2161.

[2] WHO, Guidelines for Drinking-Water Quality: incorporating first addendum, 3rd ed., 2006.

[3] P. H. Gleick, The human right to water, Water Policy 1 (1998) 487 – 503.

[4] J. Chenoweth, Minimum water requirement for social and economic development, Desalination 229 (2008) 245–256.

[5] UNICEF, WHO, Progress on Sanitation and Drinking Water 2015 update and MDG assessment, 2015.

[6] P. Wassouf, T. Peska, R. Singh, A. Akbarzadeh, Novel and low cost designs of portable solar stills, Desalination 276 (2011) 294–302.

[7] J. Ward, A plastic solar water purifier with high output, Solar Energy 75 (2003) 433–437.

[8] S. Kalogirou, Seawater desalination using renewable energy sources, Prog. Energy Combust. Sci. 31 (2005) 242–281.

[9] M. A. Eltawil, Z. Zhengming, L. Yuan, A review of renewable energy technologies integrated with desalination systems, Renew. Sustain. Energy Rev. 13 (2009) 2245–2262.

[10] S. Kumar, G. Tiwari, Life cycle cost analysis of single slope hybrid (PV/T) active solar still, Appl. Energy 86 (2009) 1995–2004.

[11] G. Xiao, X. Wang, M. Ni, F. Wang, W. Zhu, Z. Luo, K. Cen, A review on solar stills for brine desalination, Appl. Energy 103 (2013) 642–652.

[12] H. R. Hay, Plastic solar stills: past, present and future 14 (1973) 393–404.

[13] A. Abdul-Fattah, Selection of solar desalination system for supply of water in remote arid zones, Desalination 60 (1986) 165–189.

[14] F. D. Husson Jr., C. J. Lennox, B. S. Hunnicutt, B. L. Spare, Solar water still, US patent 70008515, 2006.

[15] F. Stranicky, Desalination with the aid of solar energy, European Patent 345 236, 1989.

[16] A. E. Ushakoff, Inflatable solar still, US patent 2,455,835, 1948.

[17] L. Flendrig, B. Shah, N. Subrahmaniam, V. Ramakrishnan, Low cost thermoformed solar still water purifier for D&E countries, Physics and Chemistry of the Earth, Parts A/B/C 34 (2009) 50–54.

[18] K. M. Abu-Abdou, Analysis of continuous-flow thin-film solar stills, Renewable Energy 4 (1994) 839 – 845.

[19] J. Mahdi, B. Smith, Solar distillation of water using a v-trough solar concentrator with a wick-type solar still, Renewable Energy 5 (1994) 520 – 523. Climate change Energy and the environment.

[20] A. Madhlopa, C. Johnstone, Numerical study of a passive solar still with separate condenser, Renew. Energy 34 (2009) 1668–1677.

[21] H. E. Fath, H. Hosny, Thermal performance of a single-sloped basin still with an inherent built-in additional condenser, Desalination 142 (2002) 19–27.

[22] H. E. S. Fath, S. M. Elsherbiny, Effect of adding a passive condenser on solar still performance 34 (1993) 63–72.

[23] K. Vinoth Kumar, R. Kasturi Bai, Performance study on solar still with enhanced condensation, Desalination 230 (2008) 51–61.

[24] O. Haddad, M. Al-Nimr, A. Maqableh, Enhanced solar still performance using a radiative cooling system, Renew. Energy 21 (2000) 459–469.

[25] G. Tiwari, R. Tripathi, Study of heat and mass transfer in indoor conditions for distillation, Desalination 154 (2003) 161 – 169.

[26] J. Mahdi, B. Smith, A. Sharif, An experimental wick-type solar still system: Design and construction, Desalination 267 (2011) 233 – 238.

[27] H. Tanaka, Y. Nakatake, M. Tanaka, Indoor experiments of the vertical multiple-effect diffusion-type solar still coupled with a heat-pipe solar collector, Desalination 177 (2005) 291 – 302.

[28] A. T. Shawaqfeh, M. M. Farid, New development in the theory of heat and mass transfer in solar stills, Solar Energy 55 (1995) 527 – 535.

[29] G. N. Tiwari, R. Tripathi, Study of heat and mass transfer in indoor conditions for distillation 154 (2003) 161–169.

[30] B. R. Bird, W. E. Stewart, E. N. Lightfoot, Transport Phenomena, Revised 2nd Edition, John Wiley & Sons, 2006.

[31] R. Bhardwaj, M. ten Kortenaar, R. Mudde, Influence of condensation surface on solar distillation, Desalination 326 (2013) 37 – 45.