Flexible shear connectors in a tapered composite beam optimized for reuse

Nijgh, Martin; Veljkovic, Milan; Pavlovic, Marko

DOI
10.5176/2301-394X_ACE18.49

Publication date
2018

Document Version
Final published version

Published in
Annual International Conference Proceedings 6th Annual International Conference on Architecture and Civil Engineering (ACE 2018)

Flexible shear connectors in a tapered composite beam optimized for reuse

M. P. Nijgh, M. Veljkovic, M. Pavlovic
Faculty of Civil Engineering & Geosciences
Delft University of Technology
Delft, The Netherlands

R. Oly
R&D, Innovation and Methods
Astron Buildings S.A.
Diekirch, Luxembourg

***Abstract*— Composite beams are frequently used because of their competitive combination of a steel beam and a concrete deck. Further optimization of composite beams is possible through use of tapered steel beams. In terms of material reuse, composite structures generally underperform, because of the concrete casted in-situ. The most common shear connector is the welded headed stud embedded in the concrete. An alternative to welded headed studs is a bolted shear connector, which allows for demountability of the composite floor system and subsequent reuse of it. The goal of this paper is to propose a method to determine the deflection of tapered composite beams with flexible shear connectors. Starting point is the theory available in literature for straight (i.e. prismatic) composite beams with flexible shear connectors. The proposed method is used in a case study to optimize the design of a composite beam in a multi-storey car park. Validation of the derived hand-calculation method is carried out through finite element analysis. An approximation is derived based on which the deflection of tapered composite beams can be estimated through hand calculation, with a deviation less than 5%.**

Keywords: composite beam; flexible shear connector; finite element analysis; design optimization; slip

I. INTRODUCTION

Competitive cross-section design is one of the key characteristics of composite beams. Structural and functional efficiency of composite beams can be enhanced by the use of tapered steel beams, within the limits of fabrication feasibility. Apart from optimizing the cross-section design, the use of natural resources in the construction industry can be reduced by reuse of a complete composite system in the second and other life cycles. Optimized design and reuse of components/systems are the two most efficient ways in the 4R-approach (reduce, reuse, recycle and recover) in limiting environmental impact of the construction industry. Composite beams are a principal part of composite systems, used either in buildings or in bridges. Welded headed studs are most commonly used to ensure composite interaction between concrete decks and steel beams. Obviously, composite beams with traditional connectors are difficult to demount without damaging the concrete deck, and impossible to reuse. Demountable and reusable composite beams can be achieved with demountable shear connectors, which are embedded in the deck and connected in-situ to the steel beam by external bolts. The amount of such shear connectors used influences costs considerably, given the fabrication, material and installation costs per bolt. Using tapered beams in combination with a demountable shear connection system leads to a highly competitive solution, especially for buildings where deflection is governing the design and where tapering is used to provide additional functional benefit. In this paper, the analytical solution for the deflection of tapered composite beams with flexible shear connectors is presented, based on which a case study is performed to optimize the composite beam design of a multi-storey car park. The aim of this paper is to provide theoretical as well as practical background on how to design competitive tapered composite beams with flexible shear connectors

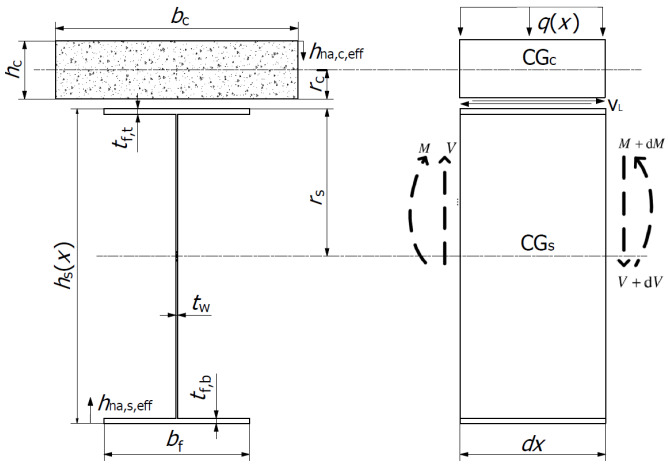

Fig. 1 - Definition of cross-sectional parameters of steel beam and concrete deck, acc. to [1][2]

II. BENDING THEORY OF STRAIGHT COMPOSITE BEAMS WITH RIGID SHEAR CONNECTORS

The deflection of composite beams is generally calculated based on the assumption of a rigid shear connection. This assumption implies that no interlayer slip occurs, i.e. the concrete deck and steel beam are connected infinitely rigid. The composite bending stiffness under this assumption can be computed through

$$EI_\infty = EI_0 + r^2 \frac{E_c A_c E_s A_s}{E_c A_c + E_s A_s}, \quad (1)$$

with r denoting the distance between the centroids of the subcomponents ($r = r_c + r_s$, Fig. 1). The bending stiffness under the assumption of infinitely rigid shear connection EI_∞ is

6th Annual International Conference on Architecture and Civil Engineering (ACE 2018)

ISSN 2301-394X
doi: 10.5176/2301-394X_ACE18.49

significantly higher than the bending stiffness of the non-composite beam,

$$EI_0 = E_s I_s + E_c I_c. \tag{2}$$

Reference is made to [1]-[3] for expressions related to the internal actions and stresses in fully rigid composite beams. The deflection of composite beams with rigid shear connection is calculated based on Euler-Bernoulli beam theory using the bending stiffness EI_∞.

III. BENDING THEORY OF STRAIGHT COMPOSITE BEAMS WITH FLEXIBLE SHEAR CONNECTORS

The assumption of rigid shear connection is an idealization that is not 100% valid in practice: the slip between the concrete and steel exists always; it is only a matter of scale/magnitude. The slip is inevitable due to bending of the shear connector or bolt-to-hole clearances. Composite beams with flexible (non-rigid) shear connectors have been thoroughly studied in [1]-[3]. For the methods described in [1]-[3], the assumptions regarding the behavior of the composite beam are as follows:

- Relative movement (slip) between members is admissible at their interface;
- Shear connectors are considered as elastic springs distributed homogeneously along the beam length;
- Vertical separation between concrete deck and steel beam is prevented (equal curvature in both elements);
- The materials in the composite beam behave linear-elastically in tension and compression.

The exact effective bending stiffness for a simply supported straight composite beam as a result of composite action with interlayer slip is given acc.to [2] as

$$EI_{\text{eff}} = \left[1 + \frac{\dfrac{EI_\infty}{EI_0} - 1}{1 + \left(\dfrac{\alpha L}{\pi} \right)^2} \right] EI_\infty. \tag{3}$$

The parameters in (3) that have not been previously defined in (1)-(2) are defined as

$$\alpha = \sqrt{\frac{Kr^2}{EI_0 \left(1 - \dfrac{EI_0}{EI_\infty} \right)}} \tag{4}$$

$$K = \frac{n_{\text{sc}} k_{\text{sc}}}{(L/2)} \tag{5}$$

In (3) the effect of the deformability of the shear connectors is taken into account through α as defined in (4) and K as defined in (5) [4], with n_{sc} being the number of shear connectors per half span and k_{sc} the (initial) stiffness of a single shear connector (Fig. 4). The deflection at mid span for a simply supported straight composite beam subject to a uniformly distributed load q_0 is given by [3] in closed-form as

$$w = w_{\infty,\max} + \frac{q_0}{\alpha^4 EI_\infty} \left(\frac{EI_\infty}{EI_0} - 1 \right) \left[\frac{1}{\cosh\left(\dfrac{\alpha L}{2} \right)} + \frac{\alpha^2 L^2}{8} - 1 \right] \approx \frac{5}{384} \frac{q_0 L^4}{EI_{\text{eff}}}. \tag{6}$$

The slip between the steel beam and concrete decks because of connector flexibility can be computed as

$$\Delta u = \frac{v_L}{K}, \tag{7}$$

with v_{L} denoting the shear flow (per unit length) defined in [3] as

$$v_{\text{L}} = V \left(1 - \frac{EI_0}{EI_{\text{eff}}} \right) \frac{1}{r}. \tag{8}$$

The maximum effective normal stresses in the concrete deck and steel beam are shown in [2] [3], respectively:

$$\sigma_{i,\text{eff},\max} = \mp \frac{E_i h_{\text{na},i,\text{eff}}}{EI_{\text{eff}}} M, \tag{9}$$

with $h_{\text{na},i,\text{eff}}$ following the convention indicated in Fig. 1, with magnitude

$$h_{\text{na},i,\text{eff}} = r_i + \left(1 - \frac{EI_0}{EI_{\text{eff}}} \right) \frac{EI_{\text{eff}}}{E_i A_i r}. \tag{10}$$

IV. BENDING THEORY OF TAPERED COMPOSITE BEAMS WITH FLEXIBLE SHEAR CONNECTORS

An attempt to extend the theory from section II in such a way that also the deflection of tapered composite beams can be determined is presented below. In the case of tapered composite beams, all cross-sectional geometry related parameters are a function of position along the beam axis. Therefore, a trial expression for the effective bending stiffness is adopted in the form

$$EI_{\text{eff}}(x) = \left[1 + \frac{\dfrac{EI_\infty(x)}{EI_0(x)} - 1}{1 + \left(\dfrac{\alpha(x) L}{\pi} \right)^2} \right] EI_\infty(x). \tag{11}$$

Given that the bending moment distribution is assumed to be known, and that a trial solution for the effective bending stiffness distribution is adopted, the second-order linear differential equation for bending can be used to determine the deflection.

$$\frac{d^2w}{dx^2} = \frac{M(x)}{EI_{\text{eff}}(x)} \tag{12}$$

$$w(x) = \int_0^x \left[\int_0^x \frac{M(x)}{EI_{\text{eff}}(x)} \mathrm{d}x + C_1 \right] \mathrm{d}x + C_2 \tag{13}$$

The solution of (12) is given in (13). The integration constants C_1 and C_2 in (13) can be solved based on the boundary condition $w(0) = 0$ and the symmetry condition $w'(L/2) = 0$. Subsequent simplification of (13) for $x = L/2$ provides the deflection at mid-span as

$$w(L/2) = \int_0^{L/2} \frac{M(x)}{EI_{\text{eff}}(x)} x \, \mathrm{d}x. \tag{14}$$

Eq. (14) can be solved numerically to arrive at the approximation of the deflection as in (6). The internal stresses in each subcomponent can be computed based on earlier work [2] [3]. The results of the proposed analytical model will be validated based on a case study in the following sections.

V. CASE STUDY DESCRIPTION: MULTI-STOREY CAR PARKS

Multi-storey car parks are a good example of structures where tapered composite beams provide additional functional benefit. A small slope ensures drainage of rainwater dripping from cars and in case of fire reduces the risk of fire spreading. The design of car parks is generally governed by the deflection or vibrations rather than strength, indicating that either a precamber or a variable composite beam height may be necessary to meet maximum deflection requirements. Precambering of the steel beam is not possible in combination with large prefabricated concrete elements: it is obvious that the straight decks do not align with the (curved) steel beam in this case.

The design of a demountable and reusable multi-storey car park building is considered in this case study, and is largely based on previous work by [5][6]. Starting point for the design is a span of 16 m, to achieve a structure that is optimized for car park buildings [7], as illustrated in Fig. 3. The goal of the case study is to make an optimal design of the steel beam by varying the cross section over the length through tapering. Optimal means that the amount of material is reduced as much as possible, in combination with a small structural height. As an alternative, a straight (non-tapered) steel beam is designed with the same volume of steel.

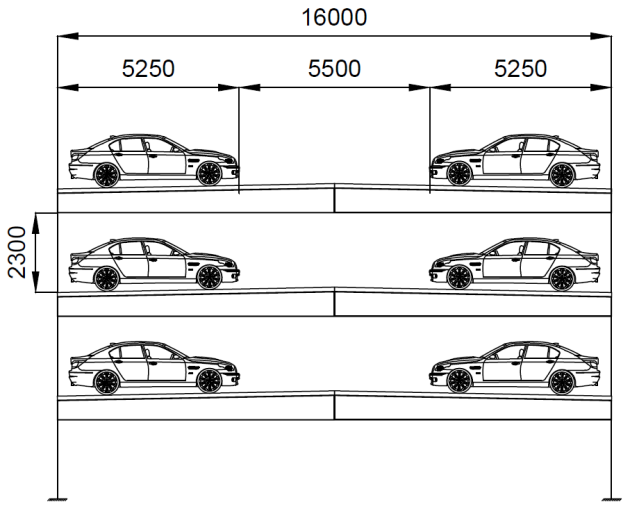

Fig. 3 - Car park design for case study: two parking bays of 5.25m and a driving lane of 5.5 meter to allow for easy maneuvering. Dimensions in millimeters

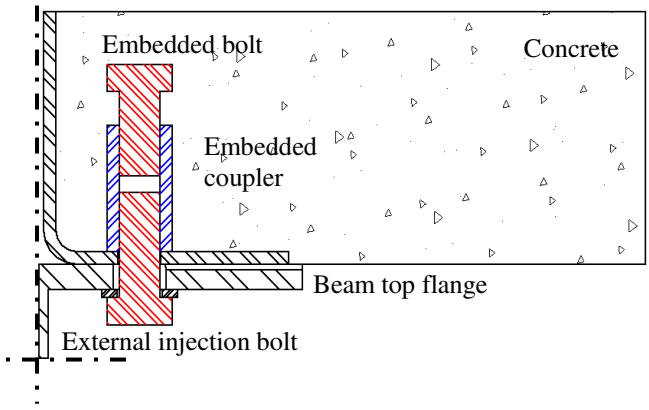

Fig. 2 - Demountable shear connection system, concrete height 120 mm and top cover 25 mm

A. *Geometry of Car Park Building*

The car park building consists of prefabricated concrete decks (C30/37) with a length of 8000, a width b_c = 2600 mm and thickness h_c = 120 mm. The concrete decks are placed with their short direction spanning between two steel beams; on both ends the concrete is connected to the steel beam through shear connectors. In longitudinal direction, the slab is discontinuous at mid span, but a connection is foreseen to ensure interaction between the decks. Around the bottom edges of the concrete, an angle frame is used to prevent damage to the concrete during transport and (de)mounting. The unpropped steel beams initially support the self-weight of the decks. After installation of the shear connectors, the live load is carried through composite interaction.

The steel beams of steel grade S355 are tapered such that the height at mid span is 150 mm more than at the supports (slope 1.9%). The corresponding slope of the car park surface is assumed ideal in terms of drainage. It is assumed that a minimum flange width of b_f = 300 mm is necessary to properly support the concrete decks on the upper flange. The width of the tensile flange is assumed equal to that of the upper flange.

B. *Shear connector system*

To allow for demountability and reuse of the building, demountable shear connectors are used that are uniformly distributed along the beam length. These shear connectors consist of an embedded M20 bolt and coupling nut, that are connected to the steel beam with an external M20 bolt through the top flange [8] as illustrated in Fig. 2. To allow for fabrication and executional tolerances, oversize holes Ø26 mm

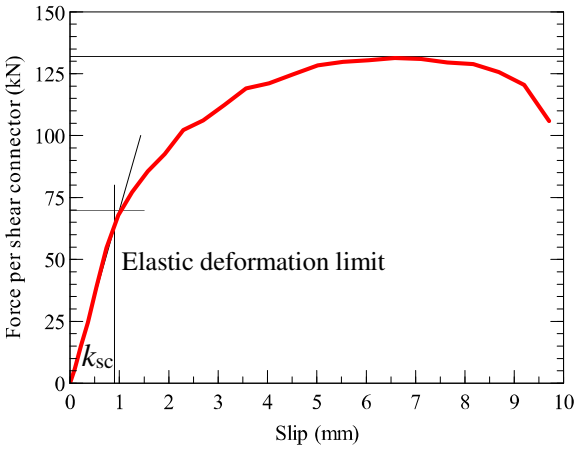

Fig. 4 - Load-slip relationship of shear connector system based on FE-modelling of push-out test

are applied in the top flange. To significantly reduce the negative effects of the oversize holes on the stiffness of the shear connection, the remaining clearance is filled with epoxy resin through an injection channel in the head of the external bolt. Preliminary finite element analysis of push-out tests has indicated that the (average) ultimate shear connector resistance is 130 kN. Based on the FE analysis, the initial shear connector stiffness is taken as k_{sc} = 70 kN/mm (experimentally estimated until 0.9 mm of slip), as illustrated through Fig. 4.

C. Actions

Variable loads are assumed conform EN 1991 [9] for Category F structures (traffic areas with vehicle weights ≤ 30 kN) as 2.5 kN/m^2. Additional variable loads are assumed as 0.5 kN/m^2, hence the total characteristic variable load is

$$Q_k = 3.0 \text{ kN/m}^2. \tag{15}$$

Combination, Frequent and Quasi-permanent values of variable actions are determined in accordance with EN 1990 [10], indicating $\psi_0 = 0.7$, $\psi_1 = 0.7$ and $\psi_2 = 0.6$, respectively.

Self-weight of the non-prismatic steel beam is assumed to be uniformly distributed along the beam length with a magnitude of $q_{G,s}$ = 0.8 kN/m. This assumption can be made given that the self-weight of the steel beam is small (10%) compared to the self-weight of the concrete decks. The density for concrete is assumed as γ_c = 25 kN/m^3. The characteristic value of the self-weight is assumed as

$$G_k \approx h_c \gamma_c + \frac{q_{G,s}}{b_c} = 3 + 0.3 = 3.3 \text{ kN/m}^2. \tag{16}$$

D. Design verification (ULS, SLS)

Composite beam design is verified in the Ultimate Limit State (ULS, for strength) and in the Serviceability Limit State (SLS, for deflection and irreversible deformations).

a) Ultimate Limit State

The resistance of the composite beam is checked according to EN 1993-1-1 [11], EN 1993-1-5 [12] and EN 1994-1-1 [13] in the Ultimate Limit State. Based on [11], the design resistance of the shear connectors is approximated as

$$P_{Rd} = 0.9\frac{P_{Rm}}{\gamma_V} = 0.9\frac{130}{1.25} = 93.6 \text{ kN}. \tag{17}$$

b) Serviceability Limit State

The recommended limiting value for the maximum deflection (at mid span) of composite beams is

$$\delta_{tot} \le L/250 = 64 \text{ mm}. \tag{18}$$

Contributions to the total deflection δ_{tot} at mid span are assumed to originate from the deflection δ_1 due to self-weight (execution stage, no composite action)

$$\delta_1 = \int_0^x \frac{\frac{G_k b_c x}{2}(L-x)}{EI_s(x)} x\mathrm{d}x, \tag{19}$$

the deflection $\delta_{2,1}$ due to the frequent value of the variable action $\psi_1 Q_k$ at time of first loading (t_0 = 28 days)

$$\delta_{2,1} = \int_0^x \frac{\psi_1 \frac{Q_k b_c x}{2}(L-x)}{EI_{eff,t_0}(x)} x\mathrm{d}x, \tag{20}$$

and the deflection $\delta_{2,2}$ at t = ∞ due to creep under the quasi-permanent variable action $\psi_2 Q_k$

$$\delta_{2,2} = \int_0^x \frac{\psi_2 \frac{Q_k b_c x}{2}(L-x)}{EI_{eff,t_\infty}(x)} x\mathrm{d}x - \int_0^x \frac{\psi_2 \frac{Q_k b_c x}{2}(L-x)}{EI_{eff,t_0}(x)} x\mathrm{d}x. \tag{21}$$

The additional deflection because of creep originates from the concrete under the quasi-permanent live load. At $t = \infty$, the Young's Modulus E_c has decreased to the value $E_{c,t\infty}$ according to EN 1994-1-1 [13] following the relation

$$E_{c,t_\infty} = \frac{E_{cm,t_0}}{1 + \psi_L \varphi_t}. \tag{22}$$

For (quasi)-permanent loads, ψ_L = 1.1 and assuming 80% relative humidity (outside environment), φ_∞= 2.0

E. Limitations

Certain limitations to the validity of the design of the case study apply. For example, the resin is considered as a time-independent material, whereas it is generally acknowledged that resins show creep behavior [14]. The creep behavior of the resin is to be further investigated through material tests, taking into account the beneficial effect of the multiaxial compressive stress state in the material. Similarly, creep occurs in the concrete in the areas where the shear force is transferred. Both creep mechanisms cause the deflection to increase in time: the extent to which this occurs is investigated through future full-scale composite beam tests in the Delft University of Technology laboratory.

VI. CASE STUDY OPTIMIZATION & VERIFICATION

The multi-storey car park described in section V is first optimized in terms of the deflection δ_{tot} (18) because this serviceability criterion is generally governing the design of long-span car park buildings. After choosing an optimized design for the Serviceability Limit State, design verification in the Ultimate Limit State is carried out.

A. *Optimization of Beam Design for Deflection*

Initial design is proposed with a web thickness of t_w = 4 mm to minimize material use in this part. Compressive flange thickness is adopted as $t_{f,t}$ = 12 mm to allow for elastic design (class 3) based on the slenderness limits of EN 1993-1-1. Thickness of tensile flange is varied since no local instability will occur. In terms of material savings, reducing the tensile flange thickness is optimal given that for any millimeter reduction, the web height must be reduced 300/4 = 75 mm for equivalent material saving. Such reduction in web height is significant compared to the beam height and therefore has a large influence on deflection. The amount of shear connectors n_{sc} is varied to study the effect of flexibility of the shear connection on the deflection, however it is chosen to maximize the longitudinal spacing between the shear connectors as 800 mm in order to prevent uplift and guarantee equal curvature of the steel beam and concrete deck. Therefore, the amount of shear connectors per half span is at least n_{sc} > 20. The total height of the beam at the supports h_0 is also chosen as variable. By varying h_0, the height of the beam at mid span is fixed as h_0 + 150 mm.

The deflection at mid span is plotted in Fig. 5 as a function of the number of shear connectors per half span n_{sc}, the beam height at the support h_0 and tensile flange thickness $t_{f,b}$. Reducing the thickness of the tensile flange from 10 to 6 mm does not lead to a situation in which the deflection criterion in the SLS can be met, unless the beam height is considerably increased. For 8 mm flange thickness, the deflection criterion can be met when installing the assumed minimum amount of shear connectors. The combination of these choices lead to an optimal beam height h_0 = 570 mm (utilization ratio in terms of deflection 99.8%). A comparison per deflection contribution is given in Table I.

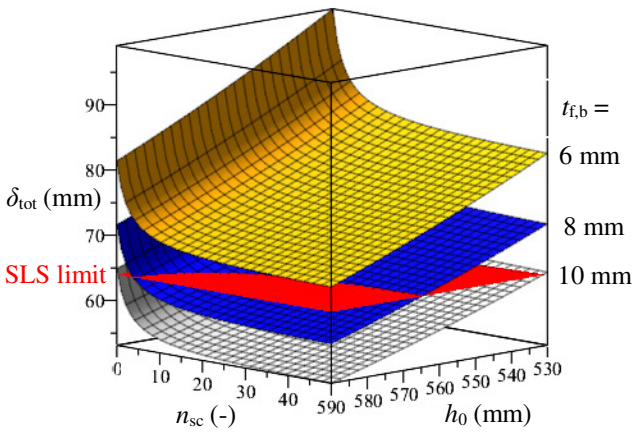

Fig. 5 - Total deflection of tapered beam as a function of amount of shear connectors, height of beam at supports and thickness of tensile flange (6, 8, 10 mm)

Table I shows good agreement between deflections calculated based on analytical model and finite element model. In the finite element model, the shear connectors are modelled as non-linear springs with force-extension relationship according to Fig. 4. Finite element model shows larger deflection in the composite as well as in the non-composite stage, with absolute differences in δ_1 and $\delta_{2,1}$ varying almost linearly with the magnitude of the respective applied loads. It is assumed that the difference between the finite element model and analytical model is linked to the shear deformation, which is only taken into account in the finite element model. The difference in total deflection is 2%, which is accurate enough for engineering practice.

TABLE I - CONTRIBUTIONS TO TOTAL DEFLECTION AT MIDSPAN IN THE SERVICEABILITY LIMIT STATE OF TAPERED COMPOSITE BEAM WITH FLEXIBLE SHEAR CONNECTORS

	Deflection (mm) according to		
	Analytical Model Tapered Beam	***Finite Element Model Tapered Beam***	***Analytical Model Equiv. straight beam using average height of tapered beam***
δ_1	47.22	47.97	52.24
$\delta_{2,1}$	14.97	15.48	16.42
$\delta_{2,2}$	1.73	1.76	1.92
δ_{tot}	63.9	65.2	70.6

In Table I, the equivalent straight beam of the optimized tapered beam is also analyzed. Equivalence is reached through assuming the height of the beam as the average height of the tapered beam, hereby keeping the material use constant. The deflection of the straight equivalent beam is approximately 10% higher, but it must be noted that with an increase of the web height (+75 mm) at the expense of the tensile flange thickness (1 mm reduction) the SLS deflection criterion can be met without using more material than in the tapered beam and without an increase in maximum structural height. Another approach for equivalent depth of a tapered beam is shown in [14]. By definition, the (equivalent) straight beam cannot fulfill functional demand of drainage.

In the serviceability limit state, care must also be taken that no irreversible deformation has taken place. Plasticity of concrete and steel is not governing in the SLS given that that the beam is of cross section class 3 (only elastic design permitted); see the next section on cross-sectional resistance. However, for potential of reuse, the shear connector system shall not undergo irreversible deformations under service loads. Therefore, the slip at the characteristic load combination shall in this case a not exceed the maximum elastic slip of the shear connector (0.9 mm, see Fig. 4). Based on (7)-(8) the slip at the characteristic load combination amounts to 0.54 mm, and therefore the design fulfills demands on reversibility of deformations.

B. *Ultimate Limit State Design Verification*

1) *Cross-sectional resistance*

The cross-sectional dimensions of the optimized design lead to a cross section classification of Class 3 and 4 for the upper flange (compression) and web (bending), respectively. Due to the limited thickness of the compressive flange, it cannot be assumed to be supported against local buckling, unless a large number of shear connectors are used (75 per deck). Depending on the maximum compressive stress in the web $\sigma_{com,Ed}$, the steel beam may be analyzed as a class 3 section. This is allowed if the c/t ratios of the web are within the limits posed in EN 1993-1-1 Table 5.2, if those limits are multiplied by the factor

$$\sqrt{\frac{f_y / \gamma_{M0}}{\sigma_{com,Ed}}}. \tag{23}$$

In (23), γ_{M0} is a partial safety factor related to cross-section resistance, taken as γ_{M0} = 1.0. The maximum compressive stress in the web as a result of self-weights can be found through the relationship

$$\sigma_{com,Ed} = \frac{M_{G,Ed}}{I_s}\left(r_s - t_{f,t}\right). \tag{24}$$

The combination of beam design and permanent loads allow for the verification of resistance according to the rules for cross-section class 3. As a result of the shear interaction, the elastic neutral axis of the steel beam shifts upwards. Consequently, only a small additional compressive stress is generated in the web, whilst simultaneously the maximum tensile stress the web increases more rapidly. The summation of the compressive stress due to permanent and variable actions also allow for class 3 design in the service life phase. For class 3 beams, nowhere in the beam the (simplified) yield criterion

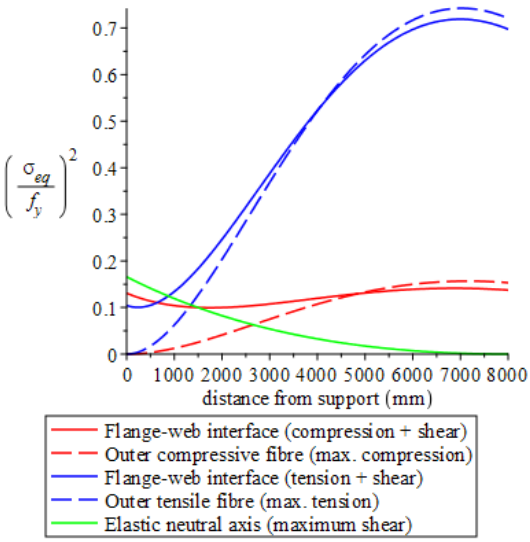

Fig. 6 - Elastic design verification of optimized tapered composite beam in ULS based on yield criterion

$$\left(\frac{\sigma_{eq,Ed}}{f_y}\right)^2 = \frac{\sigma_{x,Ed}^2 + 3\tau_{Ed}^{\ 2}}{f_y^2} \le 1 \tag{25}$$

may be exceeded. The normal stress $\sigma_{x,Ed}$ and shear stress τ_{Ed} are derived based on the (governing) design value of the actions, computed with partial factors γ_G = 1.2 and γ_Q = 1.5 for permanent and variable loads, respectively. Verifications of the yield criterion (25) are performed at 5 potentially critical locations in each cross section, indicated in Fig. 6. The utilization ratio can be computed as

$$\mathrm{UR} = \sqrt{\left(\frac{\sigma_{eq,Ed}}{f_y}\right)^2} = \frac{\sqrt{\sigma_{x,Ed}^2 + 3\tau_{Ed}^{\ 2}}}{f_y}, \tag{26}$$

based on the plots given in Fig. 6. The reason for plotting the square of the utilization ratio (26) is to allow for numerical computational evaluation of the result. The outer tensile fiber is governing the design, with a utilization ratio of approximately 86%. The maximum compressive stress in the concrete is 3.9 MPa, hence the assumption of elastic composite beam design is valid. In this paper, no design verification for resistance is carried out at $t = \infty$.

Although not explicitly shown in this paper, the optimized designs also fulfill EN 1993-1-5 [12] requirements with respect to shear buckling and flange induced buckling.

2) *Shear connector resistance*

The longitudinal shear flow (per unit length) as a result of composite interaction in carrying the design live load $\gamma_Q Q_k$ is given through (7)-(8). Given the shear connector spacing of 800 mm (10 shear connectors per half span in pairs), the longitudinal shear flow can be integrated to a longitudinal shear force, e.g. for the maximum shear force at the supports

$$V_{L,Ed} = \int_0^{L/n_{sc}} v_{L,Ed}\,\mathrm{d}x. \tag{27}$$

In (27), L/n_{sc} is the shear connector spacing. For the current design, $V_{L,Ed}$ = 107 kN. This force is carried by two shear connectors, hence the utilization ratio amounts to

$$\frac{V_{L,Ed}}{2P_{Rd}} = \frac{107}{2 \cdot 93.6} = 0.57. \tag{28}$$

Given that the spacing is constant and the shear force $V_{Q,Ed}$ decreases towards mid span, automatically all shear connectors are verified.

C. *Further concepts of design optimization*

In the present case study, only the effect of tapering in (a single) vertical direction is investigated. Further optimization can be achieved through tapering in both vertical directions (none of the flanges are parallel to ground level), as well as through horizontal tapering of the flanges. In the latter case, the flange width varies along the beam length. The degree to which such concepts contribute to the cost-effectiveness of composite structures depends on the fabrication costs of such beams.

Preliminary calculations indicate that horizontal tapering may provide significant benefits in terms of material reduction.

Recently an alternative to the resin introduced in section V was developed at Delft University of Technology. This solution, 'reinforced resin' [15], consists of a mixture of resin and steel particles ('shot'). Reinforced resin has experimentally proven to increase initial connection stiffness by approximately 70% in a steel-to-steel connection, as well as to reduce the time-dependent deformations by approximately 40% [15]. In addition, deflections under fire resistance have realistic potential to be reduced compared to the traditional injected bolt solution. Future tests at Delft University of Technology will be carried out in 2018 to investigate the behaviour of the reinforced resin in greater detail, even under cyclic loading.

VII. ANALYTICAL DESIGN OF COMPETITIVE TAPERED BEAMS

The method presented in section IV to determine deflection of tapered composite beams with flexible shear connectors is not suitable for quick hand calculations. Therefore, an analytical relationship is derived to approximate the deflection due to live loading. This approximation is validated against the exact solution. The assumptions are equal to those stated in Section III. Starting point for the derivation of the approximation is the equation proposed by [5], based on which the deflection of composite beams with rigid shear connectors can be approximated as

$$\delta_\infty = \frac{5}{384}\frac{qL^4}{\frac{1}{3}EI_\infty(x=0)+\frac{2}{3}EI_\infty(x=L/2)}. \tag{29}$$

In (29), q is a force per unit length [F/L] along the beam. The originally proposed equation (29)[5] was modified such to provide a better approximation for composite beams with rigid shear connectors. The newly proposed approximation can also be used for composite beams with flexible shear connection. As an approximation to the deflection due to self-weight and live load, the following expressions can be used, respectively.

$$\delta_1 \approx \frac{5}{384}\frac{qL^4}{EI_s\left(x=0\right)\left(\frac{1}{3}+\frac{2}{3}\left(\frac{h_m}{h_0}\right)^2\right)} \tag{30}$$

$$\delta_{2,1} \approx \frac{5}{384}\frac{qL^4}{EI_{eff}\left(x=0\right)\left(\frac{1}{3}+\frac{2}{3}\left(\frac{h_m}{h_0}\right)^2\right)} \tag{31}$$

Eq. (30)-(31) reduce to the approximate solution of [3] for $h_m = h_0$. The limits for (30)-(31) are

$$\frac{EI_c\left(x=0\right)}{EI_s\left(x=0\right)} < 0{,}15, \tag{32}$$

$$1{,}0 \le \frac{h_m}{h_0} \le 1{,}5, \tag{33}$$

$$\frac{L}{h_0} \ge 15. \tag{34}$$

Given limits (32)-(34) provide a maximum deviation of 5% between closed-form approximation and numerically obtained solution through (14). Given that the additional deflection due to creep of the concrete $\delta_{2,2}$ is small compared to the deflection as a result of self-weight δ_1 and live load $\delta_{2,1}$, formulae (30)-(31) can be considered suitable for initial design. Differences between approximations (30)-(31) and analytical models (19)-(20) for case study parameters are +1.64 mm (+3.5%) and -0.06 mm (-0.4%) for δ_1 and $\delta_{2,1}$, respectively.

VIII. CONCLUSION

Demountable shear connectors with a coupler embedded in a large prefabricated concrete deck are suitable for reusable composite flooring systems. Injection bolts are proposed as an efficient and technically simple solution to allow for execution tolerances by creating oversize holes in the steel flange. For multi-storey car park buildings, tapered steel beams provide structural efficiency and have functional benefits as they provide a slope for water drainage. The present study provides an analytically-based hand calculation model to determine approximate deflection of tapered composite beams with flexible shear connectors. This method is compared to a FEA and shows a deviation of max 2% for the case study of a demountable car park building. Optimization in terms of material use and fabrication costs are demonstrated by using the proposed analytical model for tapered beam of 1,9% slope and oversized holes of 6mm for M20 10.9 bolts. The case study clearly indicates the efficiency of the proposed technical solution based on the tapered beam and injected bolts.

IX. ACKNOWLEDGEMENT

The authors acknowledge financial support of the Research Fund for Coal and Steel (RFCS) for funding the research project "Reuse and Demountability using Steel Structures and the Circular Economy" REDUCE (RFCS-02-2015). Cooperation of the project partners (SCI, University of Luxembourg, University of Bradford, Lindab A/S, Tata Steel, Bouwen met Staal and AEC3) is gratefully acknowledged

[1] U. A. Girhammar and V. K. A. Gopu, "Composite beam-columns with interlayer slip – exact analysis", J. Struct. Eng., vol. 119, pp. 1265–1282, 1993.

[2] U. A. Girhammar and D. H. Pan, "Exact static analysis of partially composite beams and beam-columns", Int. J. Mech. Sci., vol. 49, pp. 239–255, 2007.

[3] U. A. Girhammar, "A simplified method for composite beams with interlayer slip", Int. J. Mech. Sci., vol. 51, pp. 515–530, 2009.

[4] J. Nie, J. Fan, C. S. Cai, "Stiffness and deflection of steel-composite beams under negative bending", J. Struct. Eng., vol. 130, pp. 1842–1851, 2004.

[5] M. von Arnim, "Demountable composite steel-concrete flooring system for reuse", Master Thesis, Karlsruhe Institute of Technology, Karlsruhe, 2017.

[6] G. Maheninggalih, "A demountable sturctural system of multi-storey building: Case study of car park building", Master Thesis, Delft University of Technology, Delft, 2017.

[7] ArcelorMittal, Car parks in steel. Esch-sur-Alzette, Luxembourg: ArcelorMittal.

[8] M. P. Nijgh, M. von Arnim, M. Pavlovic, and M. Veljkovic, "Preliminary assessment of a composite flooring system for reuse", unpublished.

[9] Nederlands Normalisatie-Instituut, NEN-EN 1991 Eurocode 1: Actions on structures – Part 1-1: General actions – Densities, self-weight, imposed loads for buildings. Delft: NEN, 2002.

[10] Nederlands Normalisatie-Instituut, NEN-EN 1990 Eurocode 0: Basis of structural design. Delft: NEN, 2002.

[11] Nederlands Normalisatie-Instituut, NEN-EN 1993 Eurocode 3: Design of steel structures – Part 1-1: General rules and rules for buildings. Delft: NEN, 2006.

[12] Nederlands Normalisatie-Instituut, NEN-EN 1993 Eurocode 3: Design of steel structures – Part 1-5: Plated structural elements. Delft: NEN, 2005.

[13] Nederlands Normalisatie-Instituut, NEN-EN 1994 Eurocode 4: Design of steel and concrete structures – Part 1-1: General rules and rules for buildings. Delft: NEN, 2005.

[14] M. Braham, "Elastic lateral-torsional buckling of web-tapered I-beams subjected to end moments", Proceedings of the Czecho-Slovak International Conference on Steel Structures and Bridges, Brno, 1997.

[15] M. P. Nijgh, "New materials for injected bolted connections: A feasibility study for demountable connections", Master Thesis, Delft University of Technology, Delft, 2017.