Delft University of Technology

PanelSAR, an FMCW based X-band smallsat SAR for infrastructure monitoring

Hoogeboom, Peter; Hanssen, Ramon; Pastena, Max; Imbembo, Ernesto ; van Duijn, Pieter; Otten, Matern; Monni, Stefania

Publication date
2014

Document Version
Accepted author manuscript

Published in
Proceedings of the 4th workshop on Advanced RF Sensors and Remote Sensing Instruments

Citation (APA)
Hoogeboom, P., Hanssen, R., Pastena, M., Imbembo, E., van Duijn, P., Otten, M., & Monni, S. (2014). PanelSAR, an FMCW based X-band smallsat SAR for infrastructure monitoring. In *Proceedings of the 4th workshop on Advanced RF Sensors and Remote Sensing Instruments: 4-7 November 2014, Noordwijk, The Netherlands*

Important note
To cite this publication, please use the final published version (if applicable).
Please check the document version above.

Copyright
Other than for strictly personal use, it is not permitted to download, forward or distribute the text or part of it, without the consent of the author(s) and/or copyright holder(s), unless the work is under an open content license such as Creative Commons.

Takedown policy
Please contact us and provide details if you believe this document breaches copyrights.
We will remove access to the work immediately and investigate your claim.

This work is downloaded from Delft University of Technology.
For technical reasons the number of authors shown on this cover page is limited to a maximum of 10.

PanelSAR, an FMCW based X-band smallsat SAR for infrastructure monitoring.

Peter Hoogeboom [(1)], Ramon Hanssen [(1)], Max Pastena [(2)], Ernesto Imbembo [(2)], Pieter van Duijn [(2)], Matern Otten [(3)], Stefania Monni [(3)]

[(1)]Delft University of Technology
Stevinweg 1, 2628CN Delft, Netherlands
Email: p.hoogeboom@tudelft.nl

[(2)] SSBV Space & Ground Systems NL
Huygensstraat 44, 2201DK Noordwijk, Netherlands
Email: p.van.duijn@ssbv.com

[(3)]TNO
Oude Waalsdorperweg 63, 2597AK Den Haag, Netherlands
Email: stefania.monni@tno.nl

ABSTRACT

In The Netherlands a demonstration small SAR instrument mission is prepared under the ESA Prodex program. Its launch is expected in 2017.
The overall objective of this project is to demonstrate an alternative means to systematically assess the structural health of large volumes of infrastructure (built environment), in order to avoid hazardous situations. The assessment is based on an X-band interferometric Synthetic Aperture Radar with high resolution in the order of 2 meter.
The radar system will be using the FMCW principle and will be realized within stringent Size, Weight and Power (SWAP) requirements in order to allow future missions of this type to be flown on small satellites. These future missions will possibly exploit the full FMCW capability in a formation flying sensor suite. The current demonstrator will consist of one platform with the instrument operating in Interrupted FMCW mode. This back-up mode is foreseen also for the future missions, in order to keep imaging capability in case one of the instruments in the formation has a serious malfunction.
The paper describes the mission goal, the radar instrument and its performance.

INTRODUCTION

In The Netherlands a demonstration small SAR instrument mission is prepared under the ESA Prodex program. Its launch is expected in 2017 on a platform of opportunity.
The overall objective of this project is to demonstrate an alternative means to systematically assess the structural health of large volumes of infrastructure (built environment), in order to avoid hazardous situations. Although a limited number of case studies suggest that interferometric radar data may be able to fulfill this objective, the main aspects hampering an operational deployment are (i) appropriate space-temporal sampling, (ii) acceptable cost, and (iii) guaranteed data provision. The simultaneous combination of these 3 requirements is not generally available with existing SAR missions. This is mainly because missions are designed for global coverage and/or a multitude of applications. Thus, we need to study alternatives for the currently active mission concepts.
A precursor mission is required in order to validate the approach and especially gain knowledge and confidence, finalize the parameters calibrating the algorithms, optimizing the operational scenario, verifying the in-orbit accuracy of the system transfer function and correlate calibrator data with in-situ measurements.
Hence, taking advantage of a “mission of opportunity”, the main objective of the present mission is to validate the scientific and operational principles in view of future systematic infrastructure monitoring in radar interferometric mode. The payload will be based on a low-cost, high-resolution SAR, with high space-temporal sampling capabilities.
At limited mission costs dedicated satellites for a single objective are feasible. As always, the savings should be larger than the costs. In case of high cost large satellite systems, multiple objectives are served to make the mission economically effective. A low cost, preferably small-sat mission could be affordable for a single application. We think that infrastructure is a clear example, but there are other candidate applications as well. The infrastructure monitoring application is selected for the demonstration mission and further described in this paper.
The X-band SAR instrument is now under development at SSBV Space and Ground Systems NL and should be ready for flight in 2017. To obtain small instrument dimensions, suitable for future small-sat operations a 3 by 1 meter antenna is selected, consisting of 3 panels. A panel is a 1 by 1 meter building block including not only the antenna but

also all the RF and digital front end electronics, hence the name PanelSAR. An extension to 4 panels (i.e. 4 by 1 meter antenna) is relatively easy to achieve and would allow for higher performance or operation at higher altitudes. The focus in the development is on the use of existing technology as much as possible. Nevertheless the design is advanced: it will be the first FMCW SAR in space. The choice for FMCW is based on simplicity in design, relaxation in sampling rates, RF power efficiency. However, full FMCW mode will require two platforms in formation (one transmit, one receive), which is not foreseen in the demonstration phase. The single instrument will have a complete transmit and receive capability and operate in an interrupted FMCW mode (iFMCW). More details can be found in the next sections.

INFRASTRUCTURE MONITORING

The importance of critical infrastructure need not be discussed. The actual problem lies in its safety and reliability. In western countries, including The Netherlands, the bulk of all operational infrastructure was built between 1950 and 1975, and has now reached a critical age. With its increased age and accompanied degradation, a reliable infrastructure is not guaranteed anymore. Ageing of materials affects us in everyday life. Figure 1 shows an example (source: https://beeldbank.rws.nl, Rijkswaterstaat / AVD Rijkswaterstaat). On 22 April 1987 the viaduct Kleine Heide, at highway A2 near Echt, collapsed unexpectedly. Recently collapses of several bridges in the US have occurred. On a large scale, aged infrastructure can threaten the economic competiveness of a nation, and the costs of replacement exceed its financial possibilities. Today ageing of materials and structures is a multi-billion euro issue.

Figure 1. Aerial image of a collapsed viaduct ‘KLEINE HEIDE’, the Netherlands 22 APRIL 1987.

As an example, every 4 years, the American Society of Civil Engineers releases a Report Card for America’s Infrastructure that depicts the condition and performance of the US infrastructure. The 2013 report indicated a needed investment of 3.6 billion USD.

Only in the USA, the average age of the 84.000 dams in the country is 52 years old, while the average age of the 600.000 bridges is 42 years. Of all bridges, 11% is considered to be structurally deficient.

With the Rotterdam harbor as the largest port in Europe, the Dutch economy relies strongly on the transport sector, which makes infrastructure related to roads, rails, and river shipping very important. 1600 MEuro is spent on damage to infrastructure yearly.

The demonstration mission is the first mission to systematically address the monitoring of critical infrastructure. By a proper selection of observation parameters in terms of resolution and revisit (exact repeat) time, along with a limited selection of observation areas, unprecedented observation of infrastructure is enabled, even with intervals that overcome the decorrelation of reflection hazards at X-band frequencies.

The status and safety of infrastructure can be conveniently parameterized in terms of geometric differential displacements, in (milli)meters [m], or dimensionless strain [m/m], as a function of time.

The functional relationship with the geometric (deformation) parameters can be established by using radar (SAR) interferometry, where the interferometric phase is linearly related to (changes in) the geometry. High frequency radar, such as X-band, would ensure both a significant sensitivity to the small deformations expected from structural strain, as well as the high resolution required for adequate spatial sampling of infrastructural objects. The temporal revisit rate

(repeat orbit) drives the spatial sampling, and deformation in the order of several days is in principle achievable. (Note that a single-satellite solution may impose restrictions on the covered areas).
The scientific infrastructure monitoring goal will be investigated by a Principal Investigator (PI) team at Delft University of Technology. The PI team consists in the initial phase of 2 persons, Prof. Ramon Hanssen and Prof. Peter Hoogeboom of TU Delft, Geoscience and Remote Sensing department. In the course of the project the team will be expanded. The PI team will approach partners to assist in the scientific experiments.

KEY INSTRUMENT/PRODUCT SPECIFICATIONS

The small size and versatile X-band FMCW radar is capable of mono-static interrupted FMCW (iFMCW) operation and full FMCW bi-static operation, which obviously requires more than one platform. In the demonstration project only the monostatic operation will be tested. The resolution is high compared to existing C-band satellite systems. Key element will be a continued series of high repeat frequency interferometric observations of selected areas. Exact repeat rates down to 2 days are foreseen, while exploiting an approximate 344 km orbit. The operational follow-on systems can be used in a 1 day repeat cycle, orbiting at some 580 km height. This allows for coherence levels and repeat intervals which are sufficient for e.g., agricultural applications, soil ground water analysis, and (infrastructure) deformation analysis. Of course other orbits (e.g. for global coverage) are possible as well.
The initial design of the system focused on full FMCW operation, based on a minimum of 2 platforms [4]. By having dedicated satellites for transmission and for reception/data downlink, the satellite systems can be optimized in terms of functionality, components, power generation, weight and size. However for reasons of flexibility an iFMCW mode was built into the system, allowing for single platform operation. This necessitates of course a full functioning satellite, including transmitter, receiver, datalink, etc.
Obviously, the performance of the instrument depends on altitude and FMCW mode. We will focus in this paper on the nominal operation altitude of 580 km and the 344 km altitude in the demonstration flight.
The design goal for StripMap imaging was a resolution in the order of 4 meter and a swath in the order of 10 - 20 km at 580 km altitude. This can be achieved with 300 W RF peakpower. Note that the required RF power in iFMCW mode is higher than in full FMCW mode, because the interrupted waveform has a 40% duty cycle, whereas the full FMCW mode has 80%. Everything else staying the same the peak power needs to be increased by a factor of 2 compared to the full FMCW mode. We chose to maintain a maximum RF power of 300 W and to relax the performance instead. The reason for not having 50 and 100% duty cycles is that on reception the whole swath needs to be sampled for the full waveform length.
The key observation modes for the scientific application and for other uses are presented in Table 1. They are based on the nominal altitude of 580 km and single look observation.

Observation mode	Parameter	FMCW mode (2 satellites)	iFMCW mode (single satellite)
StripMap	Resolution (Az. x Ground range)	1.7 x 2.0 m	1.7 x 3.0 m
	Incidence angle	30°	30°
	Instantaneous bandwidth	150 MHz	100 MHz
	Swath	9.3 km	9.1 km
	Worst case AASR / RASR	-24.8 / -27.8 dB	-24.9 / -27.4 dB
	Worst case NESZ	-19.9 dB	-18.6 dB
ScanSAR	Resolution (Az. x Ground range)	15.3 x 3.0 m	15.3 x 6.0 m
	Incidence angle	30°	30°
	Instantaneous bandwidth	100 MHz	50 MHz
	Swath	69.3 km	68.8 km
	Worst case AASR / RASR	-21.1 / -24.0 dB	-21.1 / -23.7 dB
	Worst case NESZ	-20.7 dB	-20.7 dB
SpotSAR	Resolution (Az. x Ground range)	1.0 x 1.0 m	1.0 x 2.2 m
	Spot size (Az. x Ground range)	6.1 x 5.5 km	5.7 x 8.1 km
	Incidence angle	30°	20°
	Instantaneous bandwidth	300 MHz	200 MHz
	Worst case AASR / RASR	-24.6 / -26.0 dB	-24.5 / -27.8 dB
	Worst case NESZ	-19.1 dB	-18.2 dB

Table 1. Key observation mode parameters.

In addition to the StripMap mode and the ScanSAR the system is capable of SpotSAR with 1 meter ground resolution (azimuth and range) at selected spots. The iFMCW mode has sufficient sensitivity to observe in SpotSAR at 20°. Furthermore, the single polarization (VV) instrument is capable of interferometric observations.
The ability to perform Electronic Baseline Correction (EBC) in interferometric data takes (compensate drift in the orbit of the small satellite by tuning the carrier) is one of the unique capabilities of this system. The system has a 300 MHz bandwidth which can be used instantaneously for very high resolution spotlight imaging or it can be split to achieve medium-high resolution (e.g. 150 MHz) and EBC for several kilometers baseline offset. A nominal 1 dB radiometric calibration accuracy is assumed in the products.
A detailed overview of the SAR system performances in StripMap and ScanSAR acquisition mode for the 344 km demonstration orbit has been summarized in Table 3 and Table 4.

DEMONSTRATION FLIGHT

The demonstration mission will be flown on a provided platform of opportunity, an ISS supply flight. Such a mission is naturally bound by conditions of the primary mission goal, its orbit parameters and its configuration. The SAR demonstration mission is designed within these boundaries. During the mission specific attitudes of the spacecraft can be reached in terms of yaw, roll and pitch angles for individual data takes or batches of data takes. Furthermore, the spacecraft and consequently the SAR antenna can move “forward” or “backward” with respect to the velocity vector, resulting over The Netherlands in a northward or southward looking of the antenna. The imposed look direction is a result of Sun/spacecraft relative geometry and will depend on the period of the year of this phase. The demonstration mission includes 3 phases:

Commissioning. During this phase we will perform test and calibration of the instrument and routine imaging activities to build up experience in all elements of the end to end SAR monitoring system. From the orbit point of view, this phase is performed with the spacecraft decaying freely without any orbit control to the altitude of approximately 344 km where the second phase will start. The duration of this phase varies from around 100 days to 200 days depending on the host spacecraft condition and the Sun activity in that period.
INSAR mission. In this phase we will perform the INSAR mission. The INSAR mission phase starts when the spacecraft naturally reaches the altitude of approximately 344 km which is the altitude of a repetitive orbit of 2 days. At this point the spacecraft will be maneuvered to a frozen orbit. This phase will last at least for 30 days in order to have at least batches of 15 data takes for selected experiment sites on various parts of the Earth.
The frozen orbit will limit the oscillation of the altitude vs latitude. The only altitude variation is natural decay due to the drag effect, which will be compensated at regular intervals to limit the cross-track variation to less than 1km. The attitude of the spacecraft (yaw, roll, pitch) will be controlled as required by the SAR acquisition schemes.
SAR mission. In the final stage we let the spacecraft decay again, until reaching 250 km altitude. The purpose of this approach is to reduce the amount of propellant necessary for the final de-orbiting. It will thus enlarge the lifetime.
During this phase (3 to 5 months) the instrument will perform data takes in selected areas worldwide and in all modes.

RADAR INSTRUMENT DESIGN, DEVELOPMENT AND PERFORMANCE

The industrial team realizing the radar is led by SSBV Space and Ground Systems NL in Noordwijk and includes GTM, TNO and NLR.
The overall system under development for the demonstrator mission is depicted in Figure 2 and it includes not only the PanelSAR itself but also an Instrument ELectronics (IEL) which will manage the instrument (command, telemetry reception and data storage), the telecommand from ground and the transmission to ground of both the overall system telemetry and the SAR data.
A block diagram of the PanelSAR is shown in Figure 3 (only one panel represented). The single antenna consists of 3 identical panels of 1x1 m, each composed by 3x3 (azimuth and elevation) tiles. Each tile is composed by 4 groups of 4 Slotted Waveguides (SWG) fed by a Transmit and Receive Module (TRM) that performs amplitude and phase modulation for achieving antenna pattern steering. Therefore, each antenna panel contains 36 TRM allowing a limited steering capability in two dimensions. The complete antenna has 9 x 12 controlled phase centers (azimuth x elevation). Since each TRM is able to reach an output signal power level of about 3 W, the total maximum transmitted power is about 100 W per panel. This power level is available in the iFMCW mode with 40% duty cycle. In full FMCW mode with duty cycle of 80% or higher, the RF power can be maintained at 100 W, but can also be reduced to about 66 W per panel. The power level selection depends on maximum DC power availability of the bus, heat transfer from the platform and the required performance.

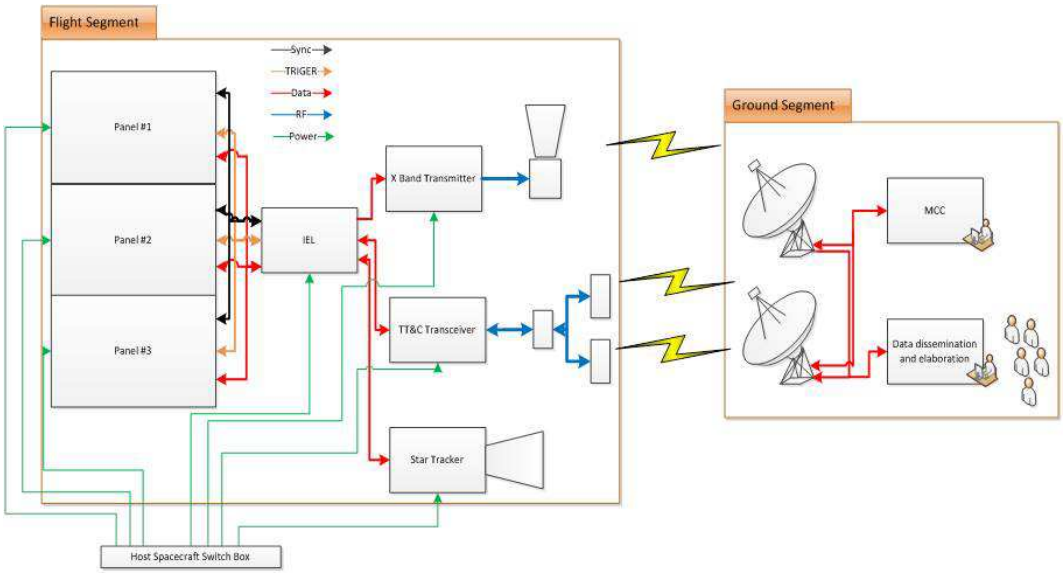

Figure 2. Overall System architecture.

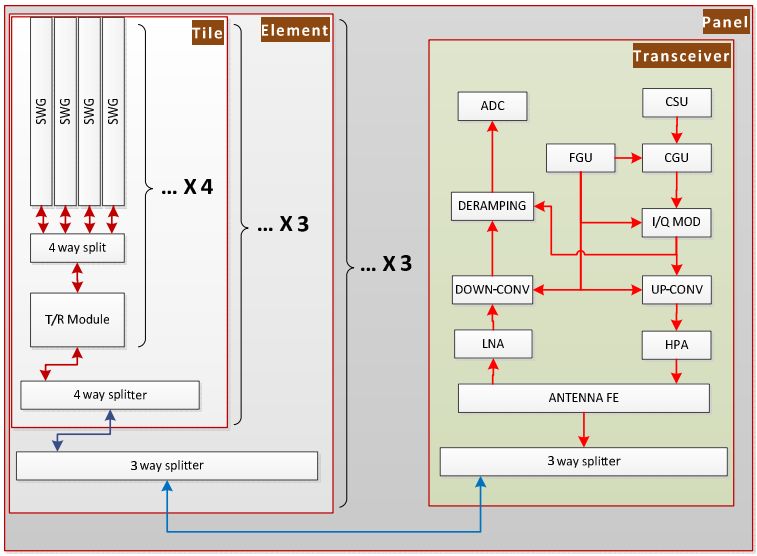

Figure 3. Block diagram of the PanelSAR.

The array can be calibrated through internal and external calibration. The antenna can both transmit and receive, allowing for a full FMCW waveform exploitation in case two systems fly in formation. A single system can operate in Interrupted FMCW mode with approximately 40% transmission duty cycle. The timing windows for transmit and receive are tuned on basis of the observation geometry.

Each panel has a Transceiver module that is designated to generate configurable waveforms, to amplify them and to process received signals. The transceiver is connected to the T-R modules by a combiner-splitter network.

The signal to be transmitted is generated by a Chirp Generation Unit (CGU) according to the characteristics imposed by the Control and Synchronization Unit (CSU) and it is up-converted to X-band and amplified by a High Power Amplifier (HPA). Next it is distributed to the T-R modules, which contain the usual elements: a HPA, a vector modulator and a Low Noise Amplifier (LNA).

The received signals are amplified and phase/ amplitude adjusted in the T-R modules. After combination of the outputs of the T-R modules the microwave signal is amplified in the Transceiver by a Low Noise Amplifier (LNA), down converted and de-ramped to a suitable IF frequency. Next the signal is digitized inside the panel, pre-processed and transmitted to the Instrument Electronics which will store the data into the on-board memory. Data transmission to a ground station will take place in the next suitable time-window after the acquisition is completed.

Signal transmission and reception is accomplished through an antenna Front-End (FE) that should also guarantee a high level of isolation.
The instrument will be controlled and operated through a Mission Control Center (MCC) situated in The Netherlands. All downlinked data is collected in the Netherlands by the SSBV Ground station Network (GSN). This network makes use of ground stations in different places around the world.
During the acquisition of the interferometric time series (INSAR mission), the orbits should be known a posteriori with a precision of 10 cm or better, and controlled to be within an effective orbital tube with a radius of 50% of the critical baseline or better. The actual value of the critical baseline will depend on selected values of incidence angle and range resolution, a typical value is 3,2 km perpendicular to the radar line of sight. In view of limited orbit control capabilities of small platforms an Electronic Baseline Compensation system will be tested, which is based on a shift of the radar center frequency. The instrument can compensate up to 3,7 km of horizontal baseline drift in this way.
Table 2 reports the values of the main system parameters including reference values used for antenna Ohmic efficiency and various losses. These values have been used for the evaluation of the Noise Equivalent Sigma Zero (NESZ), which is one of the main performance figures commonly used for SAR systems. The 344 km demonstration flight orbit is assumed.
The transmitted bandwidth can be selected up to a maximum value of 300 MHz. This allows for SpotSAR imaging at 1 meter ground resolution (not further discussed here). A trade-off with required bandwidth for EBC has to be made. For the evaluation of system performance (Table 3 and Table 4) an average value of 200 MHz transmit bandwidth has been considered, leaving 100 MHz for EBC. Bandwidths lower than 100 MHz are possible and could be useful to achieve longer ranges or higher incidence angles, e.g. in ScanSAR mode.
The system will have an on-board data compression capability that allows to consider only 4 bits for the evaluation of the expected output data rate for each panel.
Range guard times have been included to allow for switching between transmitted and deramping pulse frequency ramps. This should ensure sufficient isolation between TX and RX channels.

Parameter	**Unit**	***Value***	***Parameter***	**Unit**	***Value***
Frequency	[GHz]	9.65	Antenna Ohmic efficiency		0.8
Spacecraft altitude	[Km]	344	Receiver noise figure	[dB]	2
Incidence angle	[deg]	20 – 40	Antenna front-end losses (L_{SYS})	[dB]	2
Transmitted bandwidth	[MHz]	100 – 300	Additional losses (L_{ADD})	[dB]	0.5
Transmission duty cycle		0.4	Atmospheric losses (L_{ABS})	[dB]	0.5
Transmitted peak power per panel	[W]	100	Processing losses (L_{PRO})	[dB]	0.5
Number of panels		3	Near Range Guard Time	[µsec]	1
Number of bits (after compression)		4	Far Range Guard Time	[µsec]	1

Table 2. System parameter values.

STRIPMAP ACQUISITION MODE

Parameter	**Unit**	***Value***		
Minimum incidence angle	[°]	20	30	40
Azimuth resolution	[m]	1.7		
Ground range resolution max	[m]	2.2	1.5	1.2
RF bandwidth	[MHz]	200		
Swath	[Km]	10.5	8.8	7.0
Antenna off-nadir pointing	[°]	19.7	28.9	37.9
Pulse length	[µsec]	59.3	60.4	60.7
Receiving window	[µsec]	84.2	90.3	90.8
PRF	[Hz]	6742.6	6626.3	6595.0
AASR	[dB]	-25.0	-25.0	-24.9
RASR	[dB]	-40.1	-33.2	-28.0
NESZ (see Figure 4)	[dB]	-22.4 – -25.4	-21.3 – -22.9	-19.7 – -20.4

Table 3. StripMap performance results (iFMCW, 344 km orbit).

The StripMap acquisition mode (iFMCW, 344 km orbit) guarantees a good trade-off between swath and geometric resolution. It offers a continuous image quality in azimuth, while the ground range resolution varies from 2.2 m to 1.2 m according to the maximum incidence angle, provided that the transmitted bandwidth is 200 MHz in all cases. The swath width is currently limited by the maximum receiving window as explained before. It could be widened somewhat (up to

the antenna elevation beamwidth) by allowing some degradation in range resolution and sensitivity at the near and far range. Table 3 gives an overview of the single look main characteristics at 20°, 30° and 40° incidence angle.
The Azimuth Ambiguity to Signal Ratio (AASR), as expected, does not change with incidence angle due to the acquisition geometry, while the Range Ambiguity to Signal Ratio (RASR) decreases with decreasing incidence angle, considering the smaller amount of energy scattered in the main beam when the off-nadir angle increases.
Figure 4 shows the NESZ versus incidence angles, its worst case value is -19.8 dB, better than the -18 dB design goal.

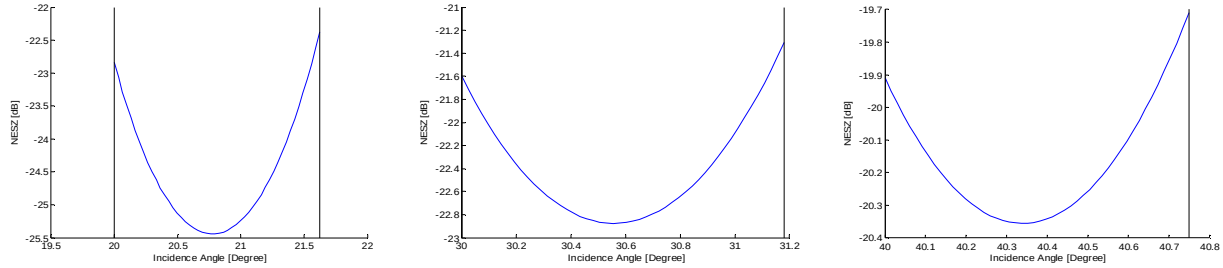

Figure 4. NESZ as a function of the incidence angle for StripMap mode.

SCANSAR ACQUISITION MODE

Parameter	**Unit**	***Value***		
Minimum incidence angle	[°]	20	30	40
Number of beams		8		
Beams overlap	[%]	1		
Azimuth resolution	[m]	15.3		
Ground range resolution max	[m]	2.9	2.0	1.6
RF bandwidth	[MHz]	150		
Total swath	[Km]	80.2	64.7	53.6
Antenna off-nadir pointing	[°]	19.7, 21.2, 22.7, 24.2, 25.6, 26.9, 28.1, 29.2	28.9, 29.9, 31.0, 32.0, 32.9, 33.7, 34.6, 35.4	37.9, 38.6, 39.3, 39.9, 40.5, 41.1, 41.7, 42.2
Pulse length	[µsec]	59.3 – 62.8	59.7 – 62.5	60.1 – 62.5
Receiving window	[µsec]	84.2 – 90.8	90.3 – 92.2	90.0 – 92.5
PRF	[Hz]	6369.2 – 6742.6	6477.8 – 6697.0	6397.4 – 6659.4
AASR	[dB]	-20.5 – -26.5	-21.1 – -26.2	-21.1 – -26.2
RASR	[dB]	-33.1 – -58.5	-30.9 – -48.3	-23.7 – -40.3
NESZ (see Figure 5)	[dB]	-22.5 – -26.7	-21.5 – -24.1	-19.9 – -21.6

Table 4. ScanSAR performance results.

The ScanSAR acquisition mode provides a large area coverage with a wider swath, obtained by scanning multiple adjacent sub-swaths at different off-nadir antenna angles with a reduced azimuth bandwidth. As a consequence, the azimuth resolution degrades as can be noticed from Table 4. For PanelSAR a maximum number of 8 sub-swaths has been chosen, to avoid an excessive degradation of the azimuth resolution. Note that the swath decreases with increasing incidence angle because of the fixed receiving time window (up to 60% of the pulse repetition interval).

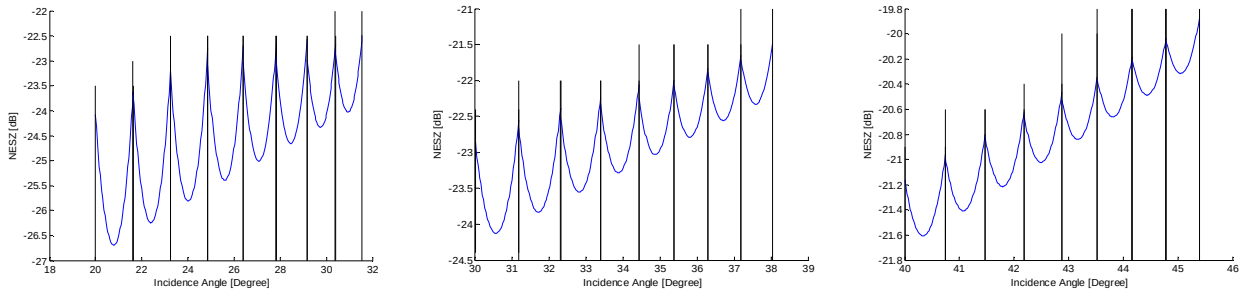

Figure 5. NESZ in the subswaths for ScanSAR mode at 20°, 30° and 40° incidence.

A 150 MHz RF bandwidth is selected in this case, the corresponding ground range resolution is between 1.6 and 2.9 meter. In order to reduce the data rate and to increase the NESZ it would be possible to reduce the bandwidth to 100 or

50 MHz. Alternatively, the high range resolution can be used for image quality improvement by multilooking. The NESZ (Figure 5) is always better than -20 dB, even at 40° incidence angle. This value guarantees a valuable system radiometric sensitivity. Also, the ambiguity ratios with levels below -23 dB ensure the image quality.

CAL/VAL

Once the SAR instrument starts to operate in the mission it should be tested and calibrated. As a minimum it will be required to:

- do active antenna performance and diagram tests (including scan conditions), based on internal calibration and an accurate antenna model,
- perform geometric and radiometric calibration in all modes over the entire swath,
- test range and azimuth resolution in all modes,
- test geometric accuracy,
- test ambiguity levels/ image quality in terms of Peak Sidelobe Ratio (PSLR) and Integrated Sidelobe Ratio (ISLR)/ sensitivity.

These analyses will require test targets (i.e. corner reflectors and transponders) in various locations (Principal Investigator sites and perhaps other sites) along with data collections on extended homogeneous areas (e.g. the Amazonian rainforest, Salar de Uyuni) and very inhomogeneous areas (e.g. Vancouver).

CONCLUSIONS

In The Netherlands a small SAR instrument is realized under the ESA Prodex programme. The radar will operate in X-band with an iFMCW waveform. The system will be ready for a demonstration and verification flight in 2017. The demonstration mission is aimed at infrastructure monitoring, employing high resolution (2 meter) StripMap, short repeat interval (2 days) interferometric scenes. A Principal Investigator team at TU Delft will perform the experiments and invite scientists for additional experiments. The radar is built by SSBV Space and Ground Systems NL.
We acknowledge the Netherlands Space Organization NSO for their financial contribution to the program.

REFERENCES

[1] A. Meta, “Signal Processing of FMCW Synthetic Aperture Radar Data”, *Ph.D. Thesis*, Delft University of Technology, 2 October 2006.
[2] N. Ahmed and C. Underwood, “Monostatic CW SAR Concept for Microsatellites”, 8th European Conference on Synthetic Aperture Radar (EUSAR), 7-10 June 2010, Aachen, Germany.
[3] S. Huber, M. Younis and G. Krieger, “The TanDEM-X mission: overview and interferometric performance”, International Journal of Microwave and Wireless Technologies, Cambridge University Press and the European Microwave Association, 2010.
[4] Peter Hoogeboom, Matern Otten, Stefania Monni, Frans Elferink, Adriano Meta, Pieter van Duijn, 2011, Formation flying FMCW SAR sensor for remote sensing applications, Proceedings ARSI conference, Noordwijk, 13 – 15 Sept 2011, 7 pages.
[5] B. Kampes, “Radar Interferometry: Persistent Scatterer Technique”, Volume 12 of the series Remote Sensing and Digital Image Processing. Springer, 2006.
[6] Liebhart, W.; Adam, N. and A. Parizzi, “Least Squares Estimation of PSI Networks for Large Scenes with Multithreaded Singular Value Decomposition”. Proc. of EUSAR 2010, 2010.
[7] Adam, N.; A. Parizzi and M. Crosetto, “Practical Persistent Scatterer Processing Validation in the Course of the Terrafirma Project”. Journal of Applied Geophysics, vol. 69, pp.59–65, doi:10.1016/j.jappgeo.2009.07.002, 2009.
[8] Gernhardt, S., Adam, N., Eineder, M. and Bamler, R.(2010) 'Potential of very high resolution SAR for persistent scatterer interferometry in urban areas', Annals of GIS, 16: 2, 103 — 111.
[9] Ramon F. Hanssen, 2001, Radar Interferometry: Data Interpretation and Error Analysis, Kluwer Academic Publishers.
[10] Buckreuss, S.; Werninghaus, R.; Pitz, W., 2009, The German satellite mission TerraSAR-X, AES vol 24, issue 11.
[11] L.M.Th. Swart, 2012, Market potential and requirements of applications based on satellite data, NSO report.
[12] Clemence Chee, 2012, Tomographic SAR Reconstruction of a 4D City using TerraSAR-X data, Munich, GRIN Publishing GmbH, http://www.grin.com/en/e-book/208933/tomographic-sar-reconstruction-of-a-4d-city-using-terrasar-x-data.

View publication stats