Adapting Automated People Mover capacity on airports to real time demand

van Doorne, Mark; Lodewijks, Gabriel; Beelaerts van Blokland, Wouter

Publication date
2019

Document Version
Final published version

Published in
Proceedings 23rd World Conference Air Transport Research Society (ATRS 2019)

Adapting Automated People Mover Capacity on Airports to Real-Time Demand via Model-Based Predictive Control

M.P. van Doorne[1], G. Lodewijks[2], W.W.A. Beelaerts van Blokland[3]

[1] Airbiz Aviation Strategies Ltd., 92 Albert Embankment, SE1 7TY, London, United Kingdom
[2] University of New South Wales, School of Aviation, NSW 2052, Sydney, Australia
[3]Delft University of Technology, Mekelweg 2, 2628 CD, Delft, The Netherlands

Abstract

The Automated People Mover (APM) is an important asset for many airports to transport passengers inside or between terminal and satellite buildings An APM system normally runs on fixed schedules throughout the day, which means that the capacity of the APM is pre-determined and not depending on the actual demand. This at times can cause either an overcapacity, which leads to a waste of resources, or an under capacity, which results in passengers waiting at the station. Especially the latter factor is problematic, as it reduced passenger experience and can negatively affect the transfer process between airport facilities. In order to better match the offered APM capacity with the demand, it is proposed in this paper to use sensor-based predictive control system, which adapts the APM system capacity to real-time demand. By means of sensor data, passenger numbers are determined before they walk onto the stations platforms, and subsequently the APM system capacity is adjusted to the measured demand. In principle there are two methods to change the APM system capacity, i.e.: 1) by changing the APM capacity (i.e. more cars per train) or 2) by changing the frequency. A simulation test case was designed to provide numerical insight in the potential of adaptively changing the capacity of an APM, based on sensor derived real-time demand. The test case was derived from a variety of typical systems used worldwide and represents a complex APM system. From the simulation results it is concluded that an intelligent design of the control system results in significant improvements in terms of passenger experience, operational cost, capital cost and emission footprint. The favourable method of adjusting capacity to demand is by increase train capacity, before reducing the headway between trains.

Key words Automated People Mover, Model Based Predictive Control, Airport Passenger Flow Monitoring,

1 Introduction

Airports are expanding to meet the increasing demand for passenger air transport. Passenger terminal buildings are becoming larger and many airports resort to the construction of additional terminals or satellites. To support the intra-terminal passenger movements and/or provide inter-terminal transit, the Automated People Mover (APM) has become an important asset for large airports. APMs are used at U.S. airports since the early ’70s and since then a variety of system solutions have been introduced to the market (ACRP, 2012b). The majority of systems make use of a rubber tire vehicle that runs on a guided track with changes.
In most cases, this is either a Bombardier Innovia APM (versions C-100, CX-100, 100, 200 or 300), the Mitsubishi Crystal Mover or the Siemens Airval, of which examples are shown in the Figures 1, 2 and 3.

Figure 1: *The Bombardier Innovia APM (Railway age, 2018).*

Figure 2: *The Mitsubishi Crystal Mover (sgtrains, 2018).*

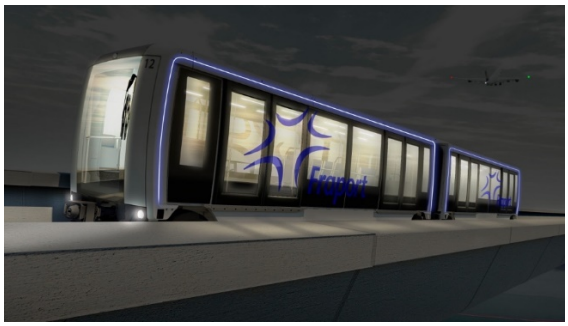

Figure 3: *The Siemens Airval (Globalrailnews, 2018).*

While several physical solutions have been developed for internal transport at airports, the operational system characteristics have not changed much since the early systems from 50 years ago. A large inefficiency is that all systems are designed with a predefined capacity (ACRP, 2012a). In many cases, the capacity is fixed throughout the day based on the peak demand and in some cases this approach is marginally improved by running a set schedule in which capacity is changed at fixed moments in time. Such a design approach inevitably results in a possible gap between the actual demand and the available capacity. Especially in airports with large demand fluctuations, this will incur overcapacities during down periods. Additionally, unforeseen surges in demand (e.g. simultaneous arrival of large aircraft) could surpass the available capacity, which results in lower than acceptable service levels for the passengers. The latter may affect the transfer process of passengers at airports, which is an important instrument to differentiate one airport from another airport. This problem is schematically visualised in Figure 4, which shows a hypothetical demand fluctuation for an APM at an airport operating with banks (peak period of arriving and departing aircraft) and the available capacity if a fixed schedule is used. It shows that the capacity, in terms of People Per Direction Per Hour (PPDPH), is set at one of the three levels creating an under capacity at the beginning and the end of the day and an overcapacity for the majority of the day.

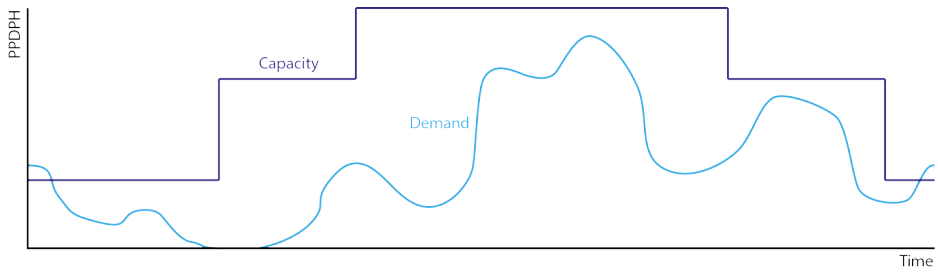

Figure 4: *Schematic example of fluctuating demand and scheduled (fixed) capacity.*

The objective of this paper is to design an intelligent control logic that minimises the error between the available capacity and the real-time demand. This paper will not only address the technical aspect to obtain such an Adaptive Control System (ACS), but will also consider the change in the system state compared to a conventional system. Which system state is better or worse depends on the requirements set by the system owner (i.e. the airport). These requirements will be a trade-off between aspects that concern the economic and sustainability impact of the system and the passenger experience. Summarized, the objective of this paper is to determine the feasibility of adapting APM capacity to real-time demand, by taking economic, sustainability, passenger comfort and implementation aspects into consideration.

2 An adaptive control system for automated people movers

The ACS is designed in such a way that it utilises the systems currently available in APM systems. Adaptive control of the APM is already done to certain extent to have automated trains run to fixed time schedule, for which the technological development of Communication Based Train Control (CBTC) is the basis. The goal of the ACS is to replace the currently used fixed schedule with a flexible schedule that adapts to real-time demand. It is therefore proposed that the available CBTC technology that currently controls train movements is combined with

a hierarchically higher controller that can change the system capacity in terms of train frequency (number of trains per hour) or train capacity (number of cars in a train).

A known example of a system that already has such a higher-level controller is Personal Rapid Transit (PRT), which allocates small vehicles (pods) to a station with demand. However, the problem with the controller type used for this system, is that it reacts to demand initiated by a passenger with a push of a button. This is sufficient for a system in which a high number of vehicles is available to react but will be problematic in a typical APM system with few trains that need more time to anticipate. The result is that passengers have to wait uncomfortably long and instead some form of proactive control is required to activate a train in time.

The recent introduction of Communication Based Train Control (CBTC) has strongly increased the operational capabilities. CBTC is a generic concept that is used in a variety of guided vehicle transit systems. It can be fitted with Automatic Train Protection (ATP), Automatic Train Operation (ATO) and Automatic Train Supervision (ATS) functions (Schifers & Hans, 2000). The CBTC's purpose is to periodically update the system and take adaptive actions to keep a train on schedule. Simply put, CBTC has the capability to run fully automated, but currently misses the control logic that is able to make adaptive time table changes based on system policies and demand measurements. In combination with new airport improvements such as Collaborative Decision Making (CDM) and advanced high resolution sensor systems that use WiFi®, Bluetooth™, infrared and CCTV/Facial recognition technology, the technological means are available to design such a control logic for an APM system in an airport environment (Eriksen, 2002), (Malinovskiy et al., 2012), (Kim et al., 2008), (Woodman & Harle, 2008).

ATC that utilises CBTC can be equipped with Automatic Train Supervision (ATS) that automatically supervises and corrects operations (Morar, 2010). A schedule is fed to the ATS and based on the network data gathered by the controller on train locations, the error is calculated between the scheduled operation and actual operation. A reactive solution is thereafter calculated to speed up or slow down trains in the system appropriately. The motivation of this paper is that inefficiencies are induced by the static and (daily) repetitive nature of a schedule currently used for an APM system. The capacity of the system is determined in the design phase of the system and is fully based on expected ridership. As day to day operations variate, this results in a design for a relatively constant capacity with only a few capacity changes throughout the day.

To select the correct addition to the control structure of APMs, it is important to first outline the measurements and actions that the system should make. The ACS should essentially control the system like it is done for PRT, in which demand is measured at a platform and a vehicle is redirected to the station. The disadvantage of the logic used in existing PRT systems (e.g. Morgantown, Abu Dhabi Masdar City and London Heathrow T5) is that the system will only adapt as a reaction to the demand, in line with the action span of a proportional controller (Baumgartner & Chu, 2013). The control system will then make a reactive (proportional) trade-of between the dwell time of that passenger and the total passengers to determine the urgency to activate a car (Raney & Young, 2005).

In the case of a PRT, such a mismatch is a relatively minor problem as capacity is always available in the vicinity to the station. This is however not self-evident for APMs that run on longer distances and have a limited amount of vehicles. This will make the period to adapt to changing demand high (and potentially undesirable). To effectively adapt the system to the demand, it is therefore important to somehow forecast the moment that passengers wait at the platform and assign the appropriate capacity to the network in terms of train capacity and/or train frequency. The only controller type that can obtain such a result is the Model-based Predictive Control (MPC). This is in line with the research done by Wang et al. (2010), who

conclude that it is possible to implement the MPC logic in current central train control systems and that thereby a much better alignment of the scheduled capacity and demand is feasible.
The proportional controller is therefore upgraded to a simplified Model-Based Predictive control (MPC), which makes a good base for the design of an adaptive control system. It allows for a combination of sensor-based measurements before the platform entrance and a (short period) predictive model to approximate the passenger behaviour between the sensor location and the platform area. It can therewith determine a set of future actions that as a combination satisfy an overall objective. The prime objective of the ACS is to minimise the difference between the system capacity for the next *n* time steps and the demand forecast for that same period *n*.

2.1 A hierarchical controller structure

Since the MPC will have to calculate the system actions for a certain forecast period, the processor requirements can become extensive. It is therefore undesirable to let all actions in the system be controlled by one central controller. Instead, a hierarchical controller structure is adopted, in which the central MPC determines the required system capacity in terms of train capacity or train frequency and translates this in a new destination for a (set of) APM car(s). Cars can run independently by means of a closed loop control (i.e. PID) that continuously determines the car position, similar to what the CBTC and ATS do today (Siahvashi and Moaveni, 2010). The hierarchically lower controllers should control any eventual track change and vehicle speed. The complete hierarchical structure is graphically presented in Figure 5. As is shown in the scheme, the normal operations on the network are controlled by the ATS and CBTC, which measure the system state and communicate this to the hierarchically lower controllers of the trains and switches. By means of the system state measurements and the given objective, these subsystems perform appropriate actions to minimise the error between the two. Whereas normally the objective is a static predefined schedule fed to the CBTC-ATS, this is substituted by the MPC controller that uses demand forecasts based on the sensor data and the system measurements of the ATS, to determine the optimum combination of train frequency, capacity and location.

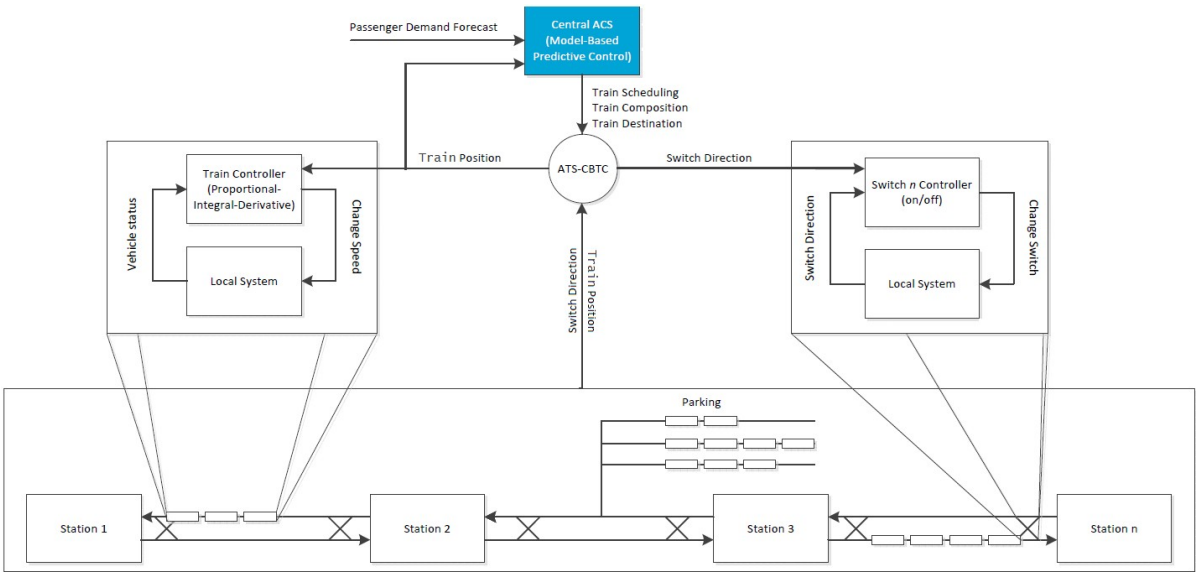

Figure 5: *Hierarchical structure with MPC determining the schedule* .

This optimum combination a driven by two factors: train capacity and train frequency. It is possible for the control logic to influence both, by either changing the number of cars per train or altering the train headway. What the optimal combination of train frequency and train capacity should be, depends on the client requirements. The system can either favour passenger experience by increasing the frequency and thereby reducing the average dwell time by calling up more trains, or it can favour a solution where frequency is kept low to reduce e.g. operational costs and the number of required cars. These two options to obtain an optimal performance are visualised in figure 6.

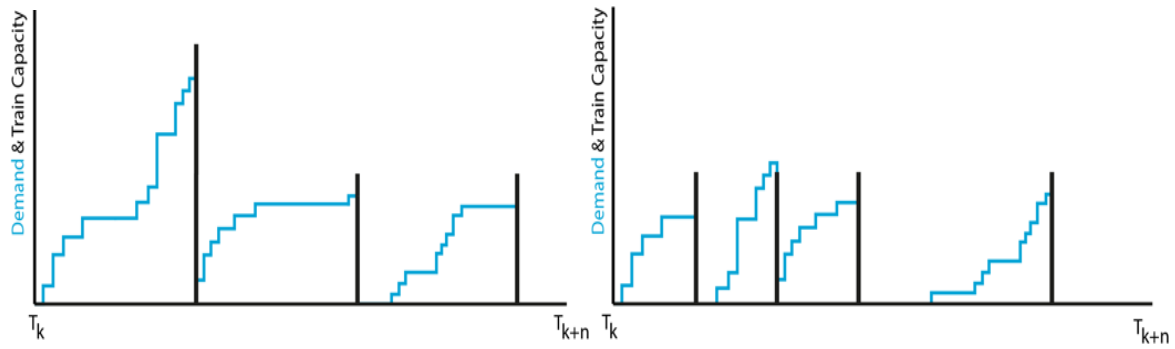

a) train capacity b) train frequency

Figure 6: *ACS capacity change approaches.*

2.2 Demand matching strategy

In principle there are two main strategies to match the offered capacity with the demanded capacity:

1. Increased train frequency favoured over increased train capacity
2. Increased train capacity favoured over increased train frequency

2.2.1 Increased train frequency favoured over increased train capacity

The central controller will use the measured forecast to determine demand for a period *n*. If the demand takes a value of 1 or more at time *n*, the decision logic will check if a train is scheduled to arrive in time and with enough capacity. If no service is schedule, the controller will activate the nearest single car train and redirect it to the appropriate platform. The train will not move instantly but will instead wait as long as possible to allow any further changes to be made if needed. When at a later time step the demand at n has taken a value that is larger than the maximum capacity of the scheduled train, an additional train service is added. This train will arrive before the train that is already scheduled, as long as this does not violate the minimum headway constraint set. If a train cannot be scheduled before the first train, the service will be a minimum headway time later. If it is not possible to add any more train services without passengers waiting longer than the maximum dwell time, scheduled trains are elongated with additional cars.

The difficulty with adding extra train services is that schedules are generated independently for all platforms. It is therefore important to synchronise a new train service with eventual departures planned at the surrounding stations. For instance, a train that is

optimally scheduled to depart at time t at station Y, can interfere with the arrival of an already scheduled train from station X. This same scheduled departure time at station Y might also interfere with the schedule of station Z. There are thus seven options to decide the departure time of a next train, which can be:

1. scheduled at the optimal time $\left(t + t_{headway}^{max}\right)$;
2. scheduled $\left(t_{headway}^{min}\right)$ before the arrival of a scheduled train from the last station;
3. scheduled $\left(t_{headway}^{min}\right)$ after the arrival of scheduled train from the last station;
4. synchronized with the arrival and use the scheduled train from the last station;
5. scheduled to arrive $\left(t_{headway}^{min}\right)$ before the departure of a scheduled train at the next station;
6. scheduled to arrive $\left(t_{headway}^{min}\right)$ after the departure of a scheduled train at the next station;
7. scheduled to synchronize with the departure of a scheduled train at the next station.

2.2.2 Increased train capacity favoured over increased train frequency

The second approach is to favour train capacity over train frequency, which logically has similarities with the first approach. The main distinction in the decision logic is the priority it gives to capacity increasing measures. When the platform demand exceeds the train capacity and an increase is required, the action taken is to add an additional car to the train. Only if no more cars can be added or if demand has risen after the planned departure time, will the controller add another train to the schedule. Again, it will first increase the capacity of this train, before changing the frequency.

2.3 ACS Logic design

Model-based predictive control is an advanced derivative of the commonly used Proportional-Integral-Derivative controller PID. MPC control incorporates PID control and combines this with an integral component and a derivative component. As Araki (2002) explains, the proportional control only assesses current measurements to make decisions and perform an action *u(t).* The action is proportional to the error *e(t)* and can take a value from a continuous range that is equal to the standard output required in a steady state system *(b).* The rate of adjustment to the error is indicated by the proportional gain factor k_p.

$$u(t) = k_p * e(t) + b \tag{1}$$

PID control also considers earlier decisions and can to some point predict future decisions. This is possible as the integral part of the error will increase if the former action made by the controller is too small or too large, thereby tuning the action over time. The differential part thereby corrects the following action based on the rate of change in the error, which will approach 0. The resulting formula is given in equation 2, where k_c is equal to k_p and τ_I and τ_D are the ratio of the integral gain factor $\frac{k_I}{k_p}$ and the derivative gain factor $\frac{k_d}{k_p}$.

$$u(k) = k_c\left[e(t) + \frac{1}{\tau_I}\int_0^t e(t)dt + \tau_D\frac{de(t)}{dt}\right] \tag{2}$$

The model-based predictive control incorporates the fundamental feedback logic to measure current state *x(t)* as is used in the former control solutions and combines this with an applicable model *C* with which it makes a prognosis of the future systems states *x(t + n)* and thereby determines an appropriate action *u(t)* (equation 3) (Morari & Lee, 1999).

$$u(t) = C(y(t))) \tag{3}$$

This derives a current action on a forecasted period of *n*, for which the maximum value is case specific and depended on the necessary time period to come to a usable calculation. the appropriate action *u(t)* is determined by an objective function *J* that considers all future actions *u(t + n)*. This objective function *J* is shown in equation 4 and consists of one or more sub-objectives which should meet an appropriate value (e.g. minimisation or maximisation). The constant α gives a weight to the respective sub-objective.

$$J\big(y(t+n), u(t)\big) = \sum_{i=1}^{N} \alpha J_i(y_i(t+n), u_i(t)) \tag{4}$$

2.3.1 Measurements

As was pointed out before, the MPC obtains real-time locations of trains *T* via the ATS and gathers forecast demand information to measure the system state. A train is defined as a single or set of cars in operation. An additional system measurement that is required, is the status of a car that is a single vehicle. If a car is executing an action or is planned to do so, its (active) status is denoted as 1 (Boolean), whereas an inactive car has a status attribute of 0 (Boolean). The trains run independently of each other and their location and status should therefore be measured separately. The same holds for the different entry platforms, which have their own demand patterns. The measurements are summarised in equation 5 and together form the set y*(t+n)*. It should be noted that an iterative process is required to calculate *y(t + n)* $\forall n \geq 1$, as the action taken at *t* will affect the predicted measurements for *t + n*.

$y_{c1}(t+n)$ = position of train *T* (network coordinate)
$y_{c2}(t+n)$ = status of car *C* (Boolean [1]/[0])
$y_{l1}(t+n)$ = last departure at location *l* (time)
$y_{l2}(t+n)$ = next departure(s) at location *l* (time) (5)
$y_{p1}(t+n)$ = demand at platform *p* (persons)
$y_{p2}(t+n)$ = maximum waiting time at *p* (time)
$y(t+n) = \left[y_{c1}(t+n), y_{c2}(t+n), y_{p1}(t+n), y_{p2}(t+n)\right]$

2.3.2 Actions

The MPC can adjust the departure time and destination of any car in the system based on the measurements *y*. It can thereby also adjust the train length in terms of cars. Due to the hierarchical structure of the control system, all local actions such as vehicle speed, acceleration, deceleration and on-line vehicle separation and trip progress are done by the car controller.

$u_{c1}(t+n)$ = departure train C (time)
$u_{c2}(t+n)$ = destination train C (network coordinate) (6)
$u_{c3}(t+n)$ = elongate train (cars/train)

While there are three actions that the MPC can execute, they are in fact part of two operational choices that combine 2 or 3 of the actions together. The first composed action $u_1(t)$ is to initiate a single car train to execute a transit to location *l* at time *t*. The other composed action does the same but initiates the movement of a multi-car train. The resulting actions are a function of all measurements and all or a selection of the partial actions combined (equation 7).

$u_1(t+n)$ = single car train = f$(y(t+n), u_{c1}(t+n), u_{c2}(t+n))$
$u_2(t+n)$ = multi car train = f$\big(y(t+n), u_{c1}(t+n), u_{c2}(t+n), u_{c3}(t+n)\big)$ (7)
$u(t+n) = (u_{c1}(t+n), u_{c2}(t+n))$

2.3.3 Constraints

The actions that can be executed by the MPC are constrained. These constraints are summarised in equation 8 and can either affect availability for, or limit the value range of, the action.

Logically, the status y_{c2} of a car should be inactive to allow any action to be executed and a next departure y_{l2} at location *l* should honour a minimal headway t_{min}. Thereby, the dwell time on a platform y_{p2} should be equal to or lower than a maximum dwell time t_{max}. Lastly, the action u_{c3} (cars/train) is constrained by a maximum length that is dictated by the system platform length.

$$
\begin{aligned}
&y_{c2}(t+n) = 0 \\
&y_{l2}(t+n) \geq y_{l1}(t+n) + t_{headway}^{min} \\
&y_{p2}(t+n) \leq t_{dwell}^{max} \\
&u_{c3}(t+n) \leq c_{length}^{max}
\end{aligned}
\tag{8}
$$

2.3.4 Sensor based demand forecast

System measurement to forecast the future demand is done by means of a sensor system. This sensor system is to be located some distance before the platform entrance, so that the MPC can effectively calculate the future demand and adapt the APM capacity. The distance required between the sensor location and the platform entrance should be of such a length that a passenger only has to wait the maximum acceptable dwell time period. As not all passengers walk at the same speed, the forecast time $t_{forecast}$ of the passenger entering should be corrected with a walking speed distribution. This implies that the larger the distance between the sensor location and the platform is, the larger the uncertainty becomes in the forecast.

As there is always a marginal share of the population that walks at significantly fast speeds, it is possible to choose the distance such that a minimum percentage of the population instead of everybody will have to wait longer than t_{dwell}^{max}. Thereby, a simple method to reduce the uncertainty is to use continuous systems such as escalators or moving walkways for which the transit time is much more precise (t_{cont}), realizing that some passengers walk on the escalator or moving walkway. Equation 9 summarises the calculation required for the precise

distance between the sensor and platform (assuming that the walking speed is normally distributed).

$$x_{sensor} = (t_{forecast} - t_{dwell}^{max} - t_{cont})(Z\sigma + \mu) \quad (9)$$

If Z is a standard normal deviate, then $(Z\sigma + \mu)$ will have a normal distribution with expected value μ and standard deviation σ.

3 Measuring the effectiveness of adaptive control

It is important to have measurable criteria, also known as Key Performance Indicators (KPIs), to quantify and compare the ACS with conventional APM operations. A distinction can be made between three KPIs:

- Passenger experience
- Costs (capital & operational)
- Environmental impact

The KPIs give an overall indication of the respective system aspects and are combinations of several supporting Performance Indicators (PIs).

3.1 Passenger experience

The overall passenger experience is measured by means of three PIs. The most basic PI is that passengers are transported in a reasonable time that is composed of a dwell time and a transit time. However, the assumption is made that trains run at 100% certainty, which automatically means that transit times will never differ. Therefore, only platform dwell time should be measured in this research to test the effective transit of passengers. The period of the acceptable waiting time is case specific and relies heavily on the customer requirements.

The two other Passenger Experience PIs concern the space that passengers have during their APM transit period on the platform while waiting, and the area available to them in the APM vehicle. By means of the IATA/Fruin standards it is possible to determine the Level Of Service (LOS) in the respective areas with which a ranking can be made (IATA, 2019).

3.2 Costs

A large infrastructural project like an APM system affects the airport owner financially and it is therefore important to measure and compare the financial implications of the alternatives. This financial impact is partly based on capital costs and partly on operational costs.

3.2.1 Capital cost performance indicators

The typical capital cost factors that are applicable to an APM system are:

- Tunnel system

- Guidance network
- Switch systems
- Control system
- Platforms
- Platform access
- Passenger sensor systems
- APM Vehicles

Not all capital cost factors are considered in this paper because the ACS does not require physical adaptions to the APM network, compared to a conventional system. Only differential cost factors are considered which are the amount of passenger sensor systems and the required amount of APM vehicles. With the assumption that no failures occur, the number of vehicles will not consider a surplus for maintenance and/or backup as it would in reality. To determine the costs, the PIs should be multiplied with their respective cost value.

3.2.2 Operational cost performance indicators

Human labour cost will not be considered as PI. The APM is an automated system and only a handful of employees reside in the control room to supervise the system, which will be the same for the ACS and conventional operation. Operational costs are instead dictated by the usage of the system, which is expressed in vehicle energy cost, vehicle maintenance cost, and nowadays important, emission compensation cost. All three factors are PIs in this paper and can be measured with the run distance or run time.

3.3 Environmental impact

The last aspect that should be measured is the environmental impact of the APM system, which is in this case is characterised by the ambient pollution of the system. This PI is calculated by multiplying the energy consumption with the average CO_2 emission of the energy production that is characteristic for the airport region. Pollution can be expressed in more emission types, such as NO_2 and particulate matter, but these emissions are just as CO_2 directly proportional to the energy consumption. It is therefore chosen to only monitor the effect in terms of CO_2.

Another form of ambient pollution which is becoming substantially more important in airport projects is noise. The experienced noise levels for an APM depend on the noise generated by the trains, the layout, form and materials used in the train, and the building and environment that surrounds the APM system. It is assumed that the noise impact in this particular research can be deemed negligible. Recent implementations of APM systems at airports (e.g. PHX, PEK, LHR, MAD) are fully electric, and running on rubber tires. In all recent examples, the system network is either underground or elevated above terminal facilities, thereby shielding passenger environments from noise exposure.

4 Test case characteristics

The conceptual control logic described in section 2 is a generic one. Irrespective of the complexity of the APM system and network, it is expected that the control logic in principle

will improve the operation of the system and reduce the discrepancy between demand and capacity. A simulation test case is designed to give insight in the potential of adaptively changing the schedule for an APM, based on sensor derived real-time demand. The test case is derived from a variety of typical APM systems used worldwide and represents a complex APM system. Table 1 presents the key parameters of the test case and Figure 7 shows the lay-out of the test case.

Parameter	Value
Network	
Stations	3
Distance station T1-satalite	1,800 m
Distance station T2-satalite	900 m
Parking locations	2
Vehicle performance	
Maximum speed	70 km/hour
Operational speed	50 km/hour
Acceleration	1 m/s^2
Deceleration	-1 m/s^2
Service standards	
Platform personal space	1.2 m^2
Vehicle personal space	0.36 m^2
Maximum dwell time	180 s
Boarding time	35 s

Table 1: *Key parameters test case.*

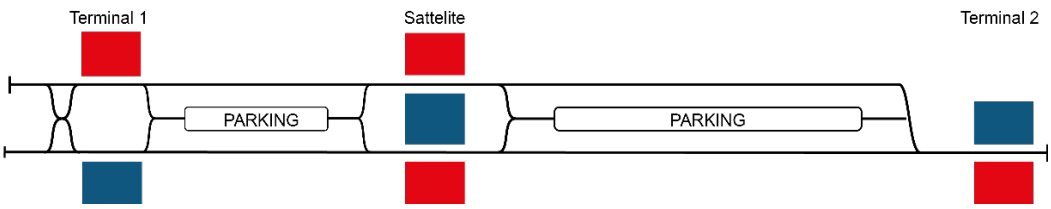

Figure 7: *Lay-out of the test case.*

4.1 Test case outline

4.1.1 Network

The reference network is a derivative of a design study for a non-disclosed airport, which is representative of large airport developments that include an APM. The assumption is made that the APM network is operated in a European environment, as to express KPI results against European cost, energy and emission levels. The European region shows a relative stable environment and represent a region in which airport developments typically are confined to all three KPIs identified in this research. The choice is made to test the model on a network of certain complexity, to test and compare the two approaches to capacity changes (favouring train frequency or capacity). The test case furthermore holds a set of parking locations, which is of pertinent importance to change train composition. Nonetheless, a network without parking locations would still benefit from the ACS, albeit only by an adaptive change of frequency. It should that the network design incorporates the three typical station configurations found in APM systems:

- Terminal 1 contains the most common layout used, with a platform at either side, and a change behind the station to move from arrivals (blue) to departures (red).
- Terminal 2 replicates a simpler head station with one track, allowing passengers to deboard first on one side (blue), and board from the other side after (red).
- The Satellite station uses the most adaptable and flexible operation, with a middle platform for arriving passengers (blue) and side platforms from which departing passengers can board after (red). It should be noted that this typical configuration requires substantially larger capital investments.

The network connects two landside accessible terminal buildings and a mid-field satellite building, with passenger traffic only between the satellite and the terminals, but never between both terminals. This kind of configuration is quite typical for airport satellites and is part of the design of e.g. Seoul Incheon (INC), Bangkok Suvarnabhumi (BKK), Atlanta Jackson-Hartfield (ATL), and the new Beijing Daxing airport (PKX). The total track length is approximately 2,700 meters, with T1 and the satellite 1,800 meters and T2 and the satellite 900 meters apart. The round-trip time of a single service is shown in Table 2.

Location	**Time (s)**	**Cum. Time (s)**
Station T1 start	0	0
Station T1 boarding	35	35
Station Satellite enter	142	177
Station Satellite boarding	35	212
Station T2 East enter	78	290
Station T2 de-boarding	35	325
Station T2 West enter	22	347
Station T2 West boarding	35	382
Station Satellite enter	77	459
Station Satellite boarding	35	494
Station T1 Enter		**636**

Table 2: *Round trip Single Service (v=50km/hour, acc=1m/s^2, dec=1m/s^2).*

4.1.2 Reference vehicle

To allow for free movement through the network (i.e. forwards, backwards and between tracks), a train with rubber tires is the only available solution. The APMs that have such a feature are built by either Mitsubishi (Crystal Mover), Bombardier (Innovia APM 100/200/300) and Siemens (AirVal) and all share primary characteristics. A single car is guided by a central rail and is roughly 12.00 metres in length, 2.80 metres in width and 3.40 metres in height. One car can transport about 60 passengers, based on a personal space of 0.36 m^2/pax, which is adequate for a short transit in peak periods. Energy and environmental information is based on the most recent APM developed by Bombardier (Innovia APM 300), which consumes 2.56 kWh/km, and has an economical life of 30 years (Bombardier, 2015). The acquisition value of an APM train car is $2.4 million, which corresponds with a single car cost for the Innovia APM CX-100 system (Kimley Horn, 2014). The speed and acceleration that a vehicle can attain varies per system. It is hereby important to distinguish operational speed and maximum design speed, which can differ substantially. The maximum design speed of an APM vehicle is mostly 80 km/hour (Bombardier, Siemens, Mitsubishi), but due to the distinctively short distances of an APM system, the operational speed is generally around 50 km/hour. For the acceleration and deceleration of the vehicles, the assumption is made that both are 1 m/s^2.

4.2 Simulation methodology

The system is modelled with the Rockwell Arena Simulation software, further referred to as 'Arena'. This software allows the user to build a Discrete Event Model/Simulation (DEM/S) in which decisions in the system are based on individual entities. The software uses the SIMAN language which was developed in the early '80s to SIMulate and ANalyse (SIMAN) manufacturing processes (Pegden, 1983). Whereas the SIMAN language is dedicated to pure discrete event systems (i.e. decisions are made at prede_ned time intervals), the Arena software incorporates continuous simulation capabilities. Herewith it becomes possible to accurately simulate vehicle/conveyor/entity movements and/or instantly react to continuous processes such as filling a tank (Kelton et al., 1998).

4.2.1. Model Structure

The model uses a moduled 5-step approach to simulating the system. The Passenger Generation module creates passenger entities based on aircraft movement data, which is taken from an undisclosed airport that includes a satellite. The demand reflects a typical two-bank operations, with continuous demand throughout the day, and is expressed in at the gate demand of passengers.

A second module is used to distribute passengers to the different stations, by transforming at the gate demand to a demand profile to be expected at the sensor locations. For this, typical show-up profiles are used to transpose demand numbers from the gates. For departing passengers, a normal distribution is used in which passengers enter the terminal building between 180 and 45 minutes before departure. It is assumed that after check-in and security, the passenger directly enters the APM. For arriving passengers, the deboarding process is assumed to be uniform over a 5 to 10-minute period (depending on the aircraft size). Passengers will directly go to the APM, walking anywhere between 50 and 500 meter which is assumed a typical distance from gate to satellite station entry.

The third module translates the demand numbers at the sensors to actions to be executed by the ACS. As such it shall allocate the APM vehicles to the different stations, based on the demand figures. This module also provides the KPIs relating to the rolling stock, i.e. costs and environmental impact.

Modules four and five simulate the passenger behaviour of dwelling, boarding and deboarding, and essentially output most of the KPIs on passenger experience.

Figure 8: Modules

4.2.2 Simulation run setup

The Run length is (logically) the time period that is simulated. The run length should be long enough to present all possible event at least 5 times (Al-Aomar et al., 2015). In the modelled environment the most important events are the arrival and departure of aircrafts, the entering and exiting of a vehicle, including the coupling of vehicles and synchronisation of the

train scheduling at one platform with the train scheduling with the former and next station. As the system is driven based on a (fixed) schedule on when aircraft should depart and arrive every day, it is however appropriate to take a run length of 24 hours to also represent the daily fluctuations.

The simulation run starts with an empty input set, which is an unrealistic situation in a continuously operating system. In the case of an APM system, the simulation run will start at 12:00 p.m. with no vehicles, aircraft and/or passengers. In reality it is however very well possible that an event has happened before the start time which should influence the PIs when the system is started. Kelton and Law (2000) propose to take the simulation run length for the warm up period also to eliminate any bias in the system, which is 24 hours.

Replications are required to diminish the effects of variation on the model. Every individual replication runs with a different seed and delivers different outputs. As it is possible that some runs are far from an actual representation, it is best to run multiple replications to even out all excesses. Hoad et al. (2007) states that the half width of the confidence interval for any criteria should be smaller than a predefined percentage of the cumulative mean, which is taken as 5%. This process is repeated until all PIs are within the limits. As some PIs are influenced differently in the alternatives, a run replication test is done for all alternatives, and the highest number of replications is taken for all models.

4.3 Reference case: Fixed schedule

The schedule for the reference case is determined by calculating the demand per direction for the design day over a specific time period. The most common unit used in literature is Passengers Per Direction Per Hour (ppdph) (ACRP, 2012b), but this does not suffice to calculate the actual capacity required in a peak period. Instead, the time period should be reduced the minimum acceptable headway during peak operations, which is 180 seconds, to ensure that during that period nobody has to wait excessively.

To even out any extreme values, the design peak is determined on the average maximum value of 10 model runs of generating passenger flows based on arrival pattern of aircraft for arriving passengers. The resulting average peak value is 293 and should therefore be covered by an appropriate capacity in the system.

The vehicle combinations and headway periods that can be run on the network are summarized in Table 3 and it shows that there is a total of 6 combinations capable to meet the demand. For the base alternative the choice is made to use trains composed of 4 cars that run with 135 seconds of headway, as this requires the least number of cars.

Headway	Trains	1 car	2 cars	3 cars	4 cars
90	8	120	140	360	480
105	7	102	205	308	411
120	6	90	180	270	360
135	5	80	160	240	320
150	5	72	144	216	288
165	4	65	130	196	261
180	4	60	120	180	240

Table 3: *Headway and train composition combinations.*

However, a correction is made to replicate a more realistic scheduled operation. The 135 seconds frequency is a must if the airport wants to have an absolute 0% chance that a passenger has to wait more than 180 seconds (during day time). This requirement is in reality a less rigid boundary to the system design and should be met for a majority of passengers, which is generally assumed as 95% for airport systems (ACRP, 2012a), (Sloboda, 2009). The standardised frequency could therefore be decreased (i.e. increase of headway) to positively affect sensitive output parameters such as the required number of vehicles and run distances, as long as the maximum waiting time is sufficiently met.

Two simulation test runs are therefore conducted for a scheduled frequency of 135 seconds as is deemed appropriate to meet peak capacity and for a scheduled frequency of 180 seconds as is the maximum allowable waiting time. The results confirm that no passengers have to wait longer than 180 seconds when a frequency is taken of 135 seconds. When this frequency is changed to 180 seconds, there is only a very marginal share of passengers that will have to wait for an extended period <0.5% of passenger; average of 10 replications). It can therefore be concluded that a scheduled operation of 4 cars running on a 180 seconds interval is sufficient. The model will run this headway/train length combination for most of the day; with the exception of 2 hours between 2 am and 4 am. Demand during this period is consistently low in all replications, with only 1 or 2 aircraft arriving. In this period, trains run every 15 minutes to serve any passengers that need transit during the down time.

4.4 ACS alternative 1: Change frequency before capacity

The first ACS alternative incorporates the adaptive logic for an APM system. The trains are now called up based on sensor data that is collected some distance before the passenger enters the platform area. When demand exceeds the capacity of the first train with 1 car (60 passengers), a second train with one car is requested and put into service before or after the first scheduled train. If no more trains can be added due to waiting time constrictions, scheduled trains are extended with additional cars, as long as these cars can be routed to the platform in time.

The system requires an extended forecast period to call up vehicles when required. This period is 370 seconds, which is equal to the transit time of the longest parking position to the platform connection, including a minimum boarding period of 35 seconds. This means that the sensor system should be located at a location which is passed by passengers 190 seconds before they enter the platform (equation 9).

$$t_{forecast} = t_{dwell}^{max} + t_{walking} \Leftrightarrow$$

$$t_{walking} = t_{forecast} - t_{dwell}^{max} = 370s - 180s = 190s \quad (9)$$

The behaviour of passengers should be appropriately modelled to prepare the vehicles in time for boarding. The assumption is made that in the example, a dedicated hallway is available through which the passengers walk. According to Young (1999), the average speed of a passenger in an airport environment is 1.347 m/s, with a standard deviation of 0.255 m/s for free-flowing environments.

4.5 ACS alternative 2: Change capacity before frequency

The second ACS alternative is similar to the first ACS alternative in a way but the logic that calls up new trains and cars. Different to the first ACS alternative, in this alternative trains will primarily be extended with additional vehicles, before increasing the frequency.

5 Test case results

The simulations generated several output parameters to measure the (K)PIs. For most (K)PIs, output parameters must be transformed into the correct unit and/or need to be multiplied with another output parameter.

The general effect of the two alternatives is shown in Figure 9. The figure displays a one-hour sample of the simulation and it can be concluded that both alternatives significantly reduce the offered capacity (grey), with trains running at a certain frequency and capacity, only when demand (red) is measured in the system. The total system results are the average of 18 full day simulation runs (which is tested to give an insignificant standard deviation). For any simulation run, the last of a four-day cycle simulation is measured, to account for any system start-up effects.

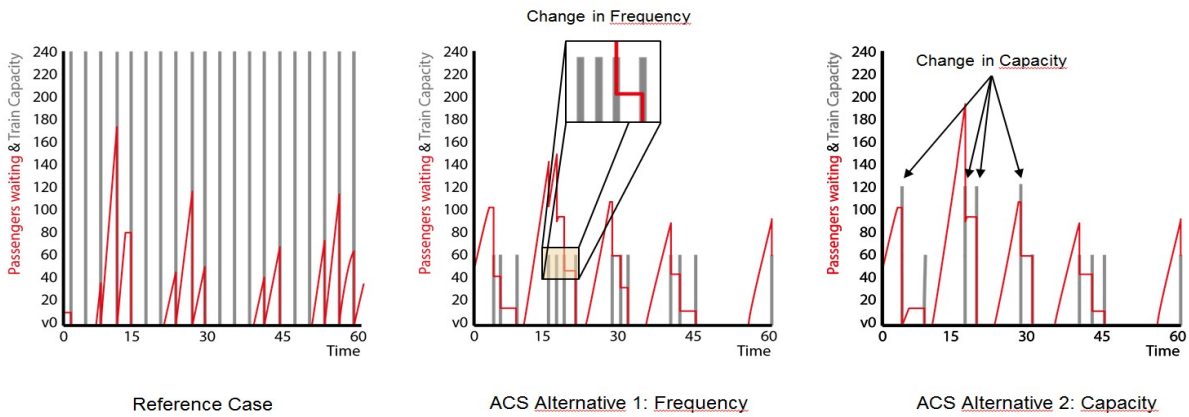

Figure 9: *One-hour example of simulation results and effect of alternatives (red is demand, grey is train frequency/capacity).*

5.1 Passenger experience

The passenger experience KPI is supported by three PIs that are measured for the replication average peak operations. The dwell time is shown in Table 4 and it shows that both alternatives have a lower average dwell time than the reference case. The average is near to 90 seconds, which is logical as the scheduled system runs a 180 second headway and the basic principle of the ACS is to wait as long as is allowable (i.e. 180 seconds). However, the average dwell time for the ACS alternatives is some 10 seconds lower due to the effect of the control logic. With the large demand for the system, frequency changing choices are being made to lower average dwell times.

	Average	Minimum	Maximum	% Change
Reference Case	92.31	0.00	900.00	-
ACS Alternative 1: Frequency	80.00	0.00	180.00	-12.5%
ACS Alternative 2: Capacity	80.42	0.00	179.99	-12.5%

*excludes passengers that walk too slow and take the next train (± 1%)

Table 4: *Results dwell time.*

The PIs platform space and vehicles space are measured with the output parameters maximum passenger waiting on the platform and maximum car load factor. These values are composed of the average maximum of the 10 replications and translated in the appropriate Level-of-Service as defined IATA ADRM 10th edition (2019). The results are shown in Table 5 for the separate alternatives and it can be concluded that all three deliver an excellent ('Optimum' or 'over-designed') experience for most areas.

Due to the nature of the ACS to wait for extra passengers, the LoS drops down to 'sub-optimum' for both ACS alternatives. The trains are filled to their maximum capacity in all alternatives, which results in a 'sub-optimum' in all cases. While both ACS alternatives show a slightly lower LoS on the aforementioned system aspects during peak periods, the system is used more effective. It is true that passengers have to stand in more crowded areas, but in none of the cases do these passengers have to endure exceptional discomfort. The result is that the load factor of the trains is higher.

Reference case					
Aspect	Average	Peak	Area m^2	m^2/Pax	LoS
Platform Level-of-Service					
Platform T1	22	124	477	3.85	Over-design
Platform T2	5	37	248	6.70	Over-design
Platform Sat (W)	23	311	248	0.79	Optimum
Platform Sat (E)	5	68	248	3.65	Over-design
Train Level-of-Service					
Train (per car)	6	60	22	0.36	Sub-Optimal

Table 5a: *Results Level-of-Service – reference case.*

ACS Alternative 1: Frequency						
Aspect	Average	Peak	Area m^2	m^2/Pax	% Change	LoS
Platform Level-of-Service						
Platform T1	67	205	477	2.32	-39.7%	Over-design
Platform T2	23	88	248	2.81	-58.1%	Over-design
Platform Sat (W)	68	466	248	0.53	-32.3%	Sub-Optimal
Platform Sat (E)	23	154	248	1.62	-55.6%	Over-design
Train Level-of-Service						
Train (per car)	32	60	22	0.36	-	Sub-Optimal

Table 5b: *Results Level-of-Service – alternative 1: frequency.*

ACS Alternative 2: Capacity						
Aspect	Average	Peak	Area m^2	m^2/Pax	% Change	LoS
Platform Level-of-Service						
Platform T1	67	208	477	2.30	-40.3%	Over-design
Platform T2	23	78	248	3.17	-52.7%	Over-design
Platform Sat (W)	67	448	248	0.55	-30.4%	Sub-Optimal

Platform Sat (E)	23	159	248	1.56	-57.3%	Over-design
Train Level-of-Service						
Train (per car)	30	60	22	0.36	-	Sub-Optimal

Table 5c: *Results Level-of-Service – alternative 2: capacity.*

5.2 Costs

The system costs are composed of capital and operational costs, of which a selection is measured in the model. The capital costs are summarised in the upper part of Table 6 and are expressed in one-time capital costs and daily depreciation costs. It is hereby assumed that the airport is able to finance the investments costs itself and is therefore not influenced by interest or discount rates. The operational costs are given in the lower part of the same table and a summation of the daily costs is given as well. It should be noted that the percentage changes given in the results only considers the measured costs and will be smaller when total project costs are considered.

5.2.1 Capital cost

The capital cost is composed of the cost of sensor systems and APM vehicles. However, recent technological developments at most airports render the actual capital investments for sensor systems negligible. Most major airports have acknowledged the importance of data gathering and passenger flow monitoring and have implemented airport wide sensor systems using movement sensors, CCTV/facial recognition and wireless signal monitoring to create high resolution profiles throughout the terminal. As such it is assumed that the implementation of a sensor location for the ACS can be done for a couple of thousands of US$, rendering it insignificant in an APM implementation plan. Nonetheless, it is important to acknowledge the capital expenditure, in case an airport would not have installed a monitoring sensor system.

The cost of the rolling stock is significant compared to the sensors, with a single car costing in the range of $2.4 million (Kimley Horn, 2014). It is assumed that the economic life of the APM vehicle is 30 years (Bombardier, 2015), and that there is no market for second-hand APM vehicle, so the residual value is assumed $0.

The capital costs are significantly lower for both ACS alternatives. The maximum required number of cars is consistently a bit higher for ACS alternative 1 (frequency) than ACS alternative 2 (capacity), as in some cases increasing the frequency before increasing the train capacity results in an uneven spread of passengers over the two scheduled services results in an additional vehicle required. If per example 100 passengers require a train service within 180 seconds, the system will in both alternatives initially activate 2 vehicles. If, however, only ±30 passengers make it to the train scheduled extra after 90 seconds, this means that the second train still has to run a 2-car train to transport the remaining 70 passengers.

5.2.2 Operational Costs

The operational costs are composed of the cost of energy, cost of emission and the cost of maintenance. Energy is used by a moving APM car and it consumes 2.56 kWh/km, as explained in section 4.1.2. The price of energy is fluctuating as a result of many factors such as changing oil prices. To get a representative and relatively stable sample value, the European

Power benchmark is consulted for 2018, which valued the average industrial electricity price of a 1 MWh at ± €70.- or US$ 80.- (European Commission, 2019). The cost per kilometre is thus 2.56 ∗ 80/1000 = 0.20$/km.

Emission costs can be estimated with the compensation rate for energy consumption, at $40,- per tonne of CO_2. As indicated by the European Environment Agency (2018), the average is 300 grams CO_2/kWh energy production. Consequently, the cost per km is 2.56*(300/1,000,000)*40=0.03$/km.

The maintenance costs are approximately 70% of the power costs, which translates to a value of 0.2 ∗ 0.70 = 0.14$/km (Kimley Horn, 2014). The whole operational cost is thus directly proportional to the total distance travelled by the cars in the system.

In the reference case, the 16 cars together covered a distance of 9,834km or 614km/car per day. In both ACS alternatives this reduced to well below 4,000km, with car utilisation dropping under 300 km/car. Hence, both alternatives result in a large cost and emission reduction compared to the reference case. This has several reasons:

1. trains do not run when there is no demand,
2. if there is demand they only serve the connection on which transport is required, after which they return to their idle parking location,
3. train combinations are a lot smaller, with on average just over 1 car per train for both ACS alternatives (instead of a fixed 4 cars per train in the reference case). As can be expected, the number of cars per train is (slightly) higher in the second ACS alternative (Capacity) compared to the first (frequency).

The ACS is beneficial to reduce costs in terms of both capital investment and daily operation. Especially the reduction in vehicles required and the distance run on the system are effective. The results are summarized in Table 6.

Reference case				
Cost	Units	Unit cost	Total costs	Depreciation
Capital costs				
Sensor system	0	0	$ 0	$ 0
APM cars	16	$ 2,400,000	$ 38,400,000	$ 3,500/day
Total			$ 38,400,000	$ 3,500/day
Operational costs				
Energy	9,830km	$ 0.20	$ 1,970/day	N.A.
Emission	9,830km	$ 0.03	$ 290/day	N.A.
Maintenance	9.830km	$ 0.14	$ 1,380/day	N.A.
Total			$ 3,640/day	N.A.
Total daily costs			**$ 7,140**	

Table 6a: *Results Costs – reference case.*

ACS Alternative 1: Frequency				
Cost	Units	Unit cost	Total costs	Depreciation
Capital costs				
Sensor system	3	Negligible	Negligible	Negligible
APM cars	14	$ 2,400,000	$ 33,600,000	$ 3,070/day
Total			$ 33,600,000	$ 3,070/day

		Operational costs		
Energy	3,700km	$ 0.20	$ 740/day	N.A.
Emission	3,700km	$ 0.03	$ 110/day	N.A.
Maintenance	3,700km	$ 0.14	$ 520/day	N.A.
Total			1,370$	N.A.
Total daily costs			**$ 4,440 (-37.8%)**	

Table 6b: *Results Costs – alternative 1: frequency.*

ACS Alternative 2: Capacity				
Cost	Units	Unit cost	Total costs	Depreciation
		Capital costs		
Sensor system	3	Negligible	Negligible	Negligible
APM cars	13	$ 2,400,000	$ 31,200,000	$ 2,850
Total			$ 31,200,000	$ 2,850
		Operational costs		
Energy	3,880km	$ 0.20	$ 780	N.A.
Emission	3,880km	$ 0.03	$120	N.A.
Maintenance	3,880km	$ 0.14	$ 540	N.A.
Total			$ 1,440	N.A.
Total daily costs			**$ 4,290 (-40.0%)**	

Table 6c: *Results Costs – alternative 2: capacity.*

5.3. Environmental impact

The KPI external effect is solemnly measured with the PI CO_2 pollution. As the APM propulsion is electric, the train itself does not expel any foul gasses. The energy is however sourced indirectly from a power plant which, if not renewable, impacts the environment. Additionally, the vehicle manufacturing intensive, and it is therefore important to assess full life cycle energy consumption. The study performed by Bombardier (2015) on the pollution of their Innovia APM 300 product states that a single car manufacturing required 89,000 kWh to produce, and is designed for a 107,000km life cycle. This translates in 0.83 kWh/km or 250 grams CO_2/km. In addition, the vehicle consumes 2.56 kWh/km, or 770 grams CO_2/km, for a total of 1,020 grams CO_2 combined.

The resulting CO_2 pollution per day is summarised in table 7, from which is clear that the environmental impact of an ACS is significant, with a possible reduction for both ACS alternatives of more than 60% compared to the reference case.

	Distance (km)	gr/km CO_2	Total ton CO_2	% Change
Reference case	9,830	1,020	10.0	-
ACS Alternative 1: Frequency	3,700	1,020	3.8	-62%
ACS Alternative 2: Capacity	3,900	1,020	4.0	-60%

Table 7: *Results daily CO_2 pollution.*

6 Conclusions

Automated People Movers (APMs) are an important asset for large airports to support intra-terminal passenger movements and/or provide inter-terminal transit. The objective of this research is to utilise new technologies such as CBTC and design a comprehensive control method to adapt the network capacity availability of an APM in an airport environment to the real-time demand. The outcome of the research shows that the implementation of an adaptive Control System has the potential to effectively reduce. The design is thereby not only tested on a technological level, but also includes economic, passenger comfort and sustainability aspects to determine the feasibility of such a control type. To design an adaptive control system, it is determined that model-based predictive control is the most favourable method. The MPC calculates a set of future actions based on passenger demand forecast models that as a combination satisfies an objective.

The prime objective of the MPC is to minimise the difference between the system capacity for the next n time steps and the demand forecast for that same period n. While demand characteristics can roughly be calculated based on historical data and airport forecasts, it is preferred to place a sensor system at an appropriate distance before the platform such that the minimum forecast period is met. The capacity can either be changed by running more/less trains or increase/decrease the number of cars per train. The sequence of such capacity changing actions depends on the system owner's requirements and can favour changing train capacity over train frequency or vice versa.

The test case results of a typical (complex), multi-station, dual-track, pinched-loop APM network show that real-time adapting of capacity to demand results in a significant improvement of passenger experience, operational costs, capital costs and emission footprint. By operating only to the demand that is required, the system will run with less cars per train over shorter distances. This results in a significantly lower run distance of the system, thereby reducing the energy consumption and energy costs, as well as operational cost drivers such as vehicle and infrastructure maintenance.

By optimally placing a sensor threshold before the platform entrance, the system will have enough time to prepare a train at the station, so that no passenger has to wait more than the maximum dwell time defined by the APM operator. Capital expenditures are reduced as the peak demand is better served.

The typicality of an Automated People Mover at an airport is that the peak is unidirectional, due to surges of passengers arriving by plane. By allocating train capacity only to the busy route(s), while maintaining a lower capacity on the others, less vehicles are needed during this time period. This is significantly different compared to the conventional operation, in which train capacity is kept the same on all parts of the network. As a result, the intelligent allocation of vehicles during the peak will lower capital expenditures.

Overall, the usage of an intelligent adaptive control system, to adapt capacity to real-time demand, shows potential to significantly improve APM operations at an airport. In terms of the KPIs passenger experience, cost and environmental impact, all can be significantly improved.

On the basis of the results of the simulation with a representative model it can be concluded that from an economical point of view the favourable method of adjusting capacity to demand is to increase train capacity, before increasing the frequency of trains (ACS Alternative 2: Capacity).

7 References

[1] ACRP, *Guidebook for Measuring Performance of Automated People Mover Systems at Airports*, vol. 37A, Transportation Research Board, 2012a.
[2] ACRP, *Guidebook for Planning and Implementation of Automated People Mover Systems at Airports*, vol. 37, Transportation Research Board, 2012b.
[3] Araki, M., 'Pid control', *Control systems, robotics and automation*, vol. 2, no. 570, 2002, pp. 1–23.
[4] Baumgartner, J., & Chu, P., 'Personal rapid transit user interface', *Automated People Movers and Transit Systems 2013: Half a Century of Automated Transit Past, Present, and Future*, ASCE, 2013, pp. 247–262.
[5] Bombardier, *Innovia APM 300 - environmental product declaration*, [https://www.bombardier.com/content/dam/Websites/bombardiercom/supporting-documents/Sustainability/Reports/BT/Bombardier-Transportation-EPD-INNOVIA-APM-300-en.pdf], 2019.
[6] Eriksen, P., 'Collaborative decision-making information management in airports', *Digital Avionics Systems Conference, 2002*, IEEE, vol. 2, 2002, pp. 7B4–1.
[7] European Commission, *Energy prices and costs in Europe,* Brussels, 2019.
[8] European Environment Agency, *CO2 emission intensity*,[https://www.eea.europa.eu/data-and-maps/daviz/co2-emission-intensity-5], 2018.
[9] Globalrailnews, *Frankfurt Airport to build fully automated people mover*, [https://www.globalrailnews.com/2018/03/22/frankfurt-airport-to-build-fully-automated-people-mover/], 2018.
[10] Hoad, K., Robinson, S., and Davies, R., Automating des output analysis: how many replications to run. *In Proceedings of the 39th conference on Winter simulation: 40 years! The best is yet to come*, pages 505-512, IEEE Press, 2007.
[11] IATA, *Airport Development Reference Manual*, Vol 11, International Air Transport Association, Montreal, 2019.
[12] Kelton, W. D. and Law, A. M., *Simulation modelling and analysis*, McGraw Hill, Boston, 2000.
[13] Kim, B.-s., Lee, G.-G., Yoon, J.-Y., Kim, J.-J., & Kim, W.-Y., 'A method of counting pedestrians in crowded scenes', *Advanced Intelligent Computing Theories and Applications. With Aspects of Artificial Intelligence*, Springer, 2008, pp. 1117– 1126.
[14] Kimley Horn, *Metro Mover System Expansion Study*, Miami-Dade County Metropolitan Planning Organization, [http://miamidadetpo.org/library/studies/metromover-system-expansion-study-final-report-2014-09.pdf], 2014.
[15] Malinovskiy, Y., Saunier, N., & Wang, Y., 'Analysis of pedestrian travel with static bluetooth sensors', Journal of the Transportation Research Board, vo. 2299, 2012, pp. 137–149.
[16] Morar, S., 'Evolution of communication-based train control worldwide', *Railway Signalling and Control Systems (RSCS 2010)*, IET Professional Development Course, 2010, pp. 281–289).
[17] Morari, M., & Lee, J. H., 'Model predictive control: past, present and future', *Computers & Chemical Engineering*, vol. 23, no. 4-5, 1999, pp. 667–682.
[18] Railway age, *Bombardier wins Phoenix APM extension contract*, [https://www.railwayage.com/passenger/bombardier-wins-phoenix-apm-extension-contract/], 2018.
[19] Raney, S., & Young, S. E., 'Morgantown people mover–updated description', *Transport Research Board Report 785*, [http://www.cities21.org/morgantown_TRB_111504.pdf], 2005.

[20] Schifers, C., & Hans, G., 'IEEE standard for communications-based train control (cbtc) performance and functional requirements', *Vehicular Technology Conference Proceedings, VTC*, 2000, pp. 1581–1585.
[21] Sgtrains, *Mitsubishi Crystal Mover (Changi Airport Skytrain)*, [https://www.sgtrains.com/train-cga.html], 2018.
[22] Sloboda, B. W., *Transportation statistics*, J. Ross Publishing, 2009.
[23] Wang, P., Zhou, Y., Chen, J., Wang, Y., & Wu, P., 'Real-time train scheduling and control based on model predictive control', *Second WRI Global Congress on Intelligent Systems (GCIS)*, vol. 3, 2010, pp. 47–50.
[24] Woodman, O., & Harle, R., 'Pedestrian localisation for indoor environments', *The 10th international conference on Ubiquitous computing*, ACM, 2008, pp. 114–123.
[25] Young, S., 'Evaluation of pedestrian walking speeds in airport terminals', *Transportation Research Record*, no. 1674,1999, pp. 20–26.